EXPLODED VIEW/PARTS LIST

Escutcheon section

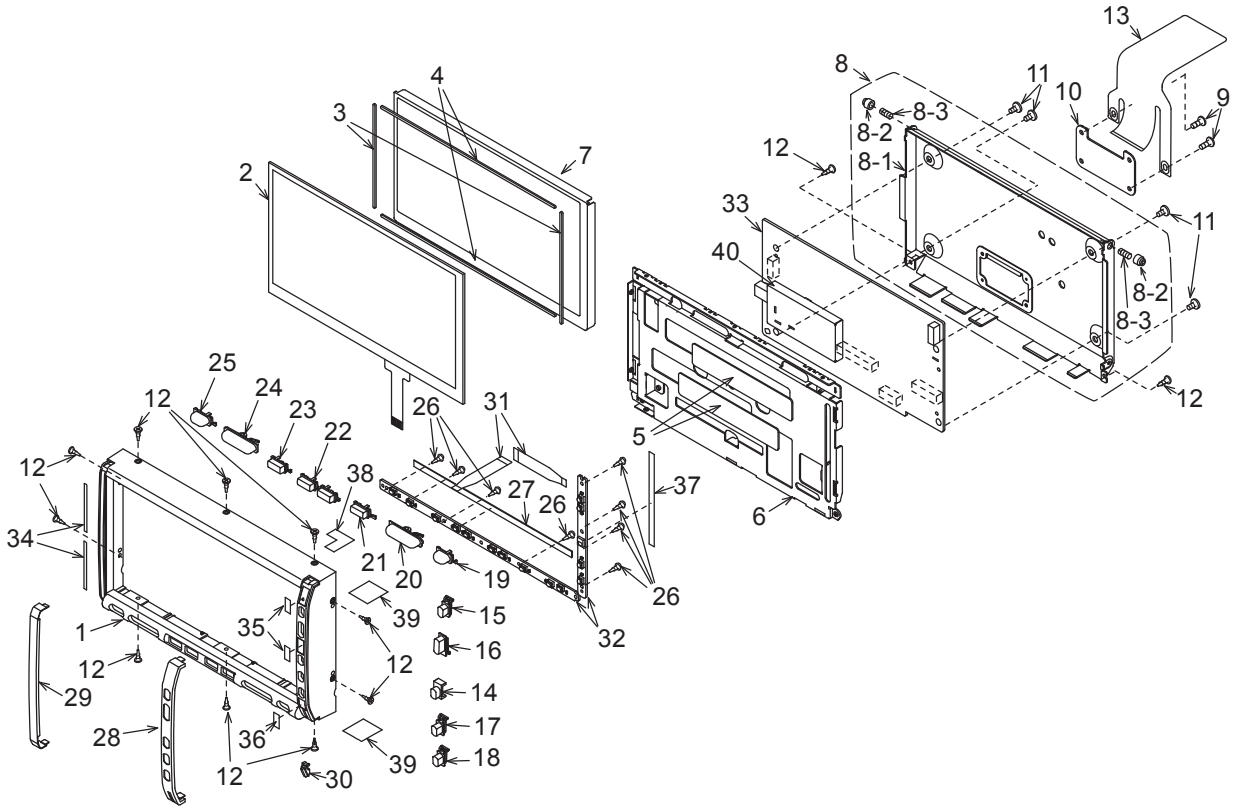

NO.	PART NO.	DESCRIPTION	Q'TY
1	370-6230-02	ESCUTCHEON	1
2	013-9711-00	T/P SWITCH	1
3	347-7038-00	SPACER	2
4	347-7423-00	SPACER	2
5	347-7042-00	DOUBLE FACE	2
6	331-4052-01	LCD-HOLDER	1
7	379-0467-00	TFT(LCD)	1
8	948-0767-00	REAR-CVR-ASSY	1
8-1	331-4051-02	REAR-CVR	1
8-2	335-7074-00	ROLLER	2
8-3	750-6746-00	ROLLER SPRING	2
9	716-1851-00	SCREW(M2x3)	2
10	039-1742-00	PWB	1
11	716-1611-50	SCREW(M2.6x4)	4
12	780-2003-03	SCREW(M2x3)	12
13	039-2808-00	FPC	1
14	335-7846-00	IR-FILTER	1
15	382-7966-00	BUTTON(PWR)	1
16	382-7967-00	BUTTON(OP/CL)	1
17	382-7968-00	BUTTON(ISR)	1
18	382-7969-00	BUTTON(ADJ)	1
19	382-7970-00	BUTTON(PLAY)	1

NO.	PART NO.	DESCRIPTION	Q'TY
20	382-7971-00	BUTTON(SEARCH)	1
21	382-7972-01	BUTTON(BAND)	1
22	382-7973-01	BUTTON(MAP/MENU)	1
23	382-7974-01	BUTTON(SRC)	1
24	382-7975-00	BUTTON(-/+)	1
25	382-7976-00	BUTTON(iPod)	1
26	778-2004-01	PAD SCREW(M1.7x5)	8
27	347-8071-00	FILM	1
28	371-5859-01	SIDE-TRIM(R)	1
29	371-5860-00	SIDE TRIM(L)	1
30	335-7847-00	ILLUMI PLATE	1
31	039-2809-00	FPC	2
32	----------	SWTCH PWB	1
33	----------	LCD PWB	1
34	347-8068-00	DOUBLE FACE	2
35	347-8069-00	DOUBLE FACE	2
36	347-8070-00	DOUBLE FACE	1
37	347-8072-00	FILM	1
38	347-8078-00	EARTH FILM	1
39	347-8084-00	FILM	2
40	331-3672-11	SHIELD CASE	1

Main section

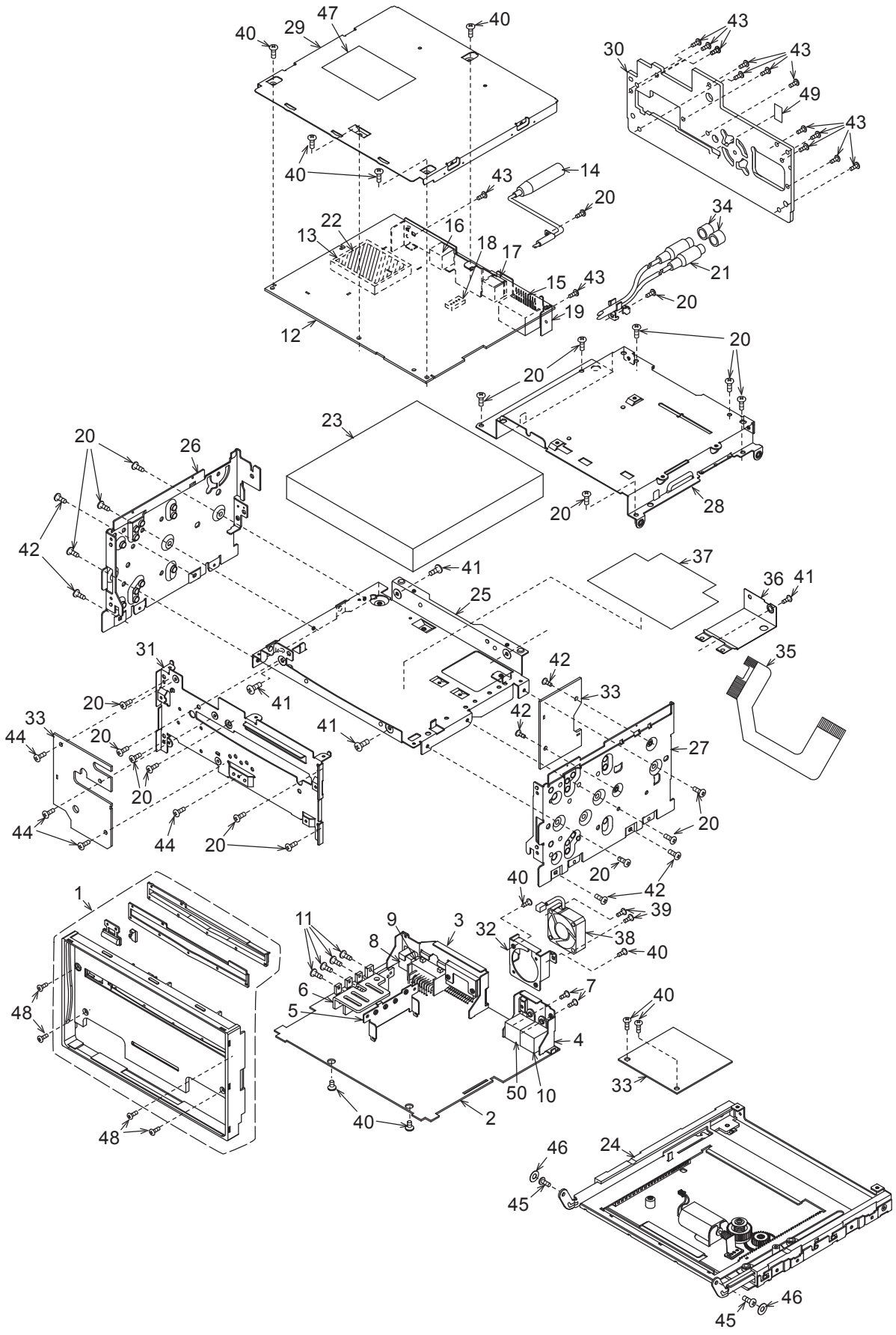

NO.	PART NO.	DESCRIPTION	Q'TY
1	940-8142-20	INNER-ES-ASSY	1
2	----------	MAIN PWB	1
3	331-4202-00	CONNECT HOLDE	1
4	331-4203-00	CONNECT HOLDER	1
5	331-4205-00	TR-HOLDER	1
6	313-1973-00	HEAT SINK	1
7	714-3006-8B	MACHINE SCREW(M3x6)	2
8	074-1194-00	OUTLET SOCKET	1
9	074-1214-00	OUTLET SOCKET	1
10	074-1171-10	OUTLET SOCKET	1
11	714-2608-8B	MACHINE SCREW(M2.6x8)	4
12	----------	TUNER PWB	1
13	880-2091D	DSP TUNER	1
14	092-2208-00	ANT-RECEPT	1
15	076-0714-20	PLUG(20P)	1
16	074-1030-00	OUTLET SOCKET(8P)	1
17	075-0385-00	JACK(OPTICAL)	1
18	076-0312-04	PLUG(RCA)	1
19	331-4206-00	CONNECT HOLDER	1
20	714-2604-8B	MACHINE SCREW(M2.6x4)	20
21	855-5544-00	RCA PIN CORD	1
22	347-7283-00	FILM	1
23	929-2504-00	DVD MECH	1
24	948-0674-27	TV-SLIDE-MECH	1
25	312-0469-01	LOWER CHASSIS	1

NO.	PART NO.	DESCRIPTION	Q'TY
26	312-0472-01	SIDE CHASSIS-L	1
27	312-0471-01	SIDE CHASSIS-R	1
28	312-0470-02	UPPER CHASSIS	1
29	310-1831-00	UPPER CASE	1
30	313-1972-00	HEAT SINK	1
31	309-0823-01	FRONT PLATE	1
32	331-4204-00	FAN HOLDER	1
33	----------	JOINT PWB	1
34	345-3799-20	RUBBER PART	2
35	039-2706-00	FPC	1
36	331-4106-00	SHIELD CVR	1
37	347-7062-10	LOWER SHEET	1
38	020-3052-00	DC-MOTOR	1
39	780-2614-50	SCREW(M2.6x14)	2
40	780-2604-50	IT SCREW(M2.6x4)	10
41	731-2608-8A	TAPTIGHT(M2.6x4)	4
42	716-3504-10	SCREW(M2.6x4)	6
43	714-2610-8B	MACHINE SCREW(M2.6x10)	14
44	716-3504-20	SCREW(M2.6x4)	4
45	716-1886-00	DECORATIVE SCREW(M2x3.4)	2
46	746-0935-00	WASHER	2
47	276-0118-00	SETPLATE	1
48	716-3504-30	SCREW(M2.6x4)	4
49	347-8184-00	COVER-FILM	1
50	074-1231-08	OUTLET SOCKET(RGB)	1

ELECTRICAL PARTS LIST

Tuner PWB(B1) section

REF No.	PART No.	DESCRIPTION
ANT101	092-2208-00	ANTENNA RECEPT
BL101	880-2091D	TUNER PACK
C100	163-4753-55	35V 4.7uF
C101	166-2201-50	22pF CH
C102	166-1511-50	150pF CH
C103	168-2232-55	0.022uF K
C104	168-1032-55	0.01uF K
C105	163-1073-35	16V 100uF
C106	168-2232-55	0.022uF K
C107	166-1011-50	100pF CH
C108	168-1022-55	1000pF K
C109	168-1042-78	16V 0.1uF
C110	168-1042-78	16V 0.1uF
C111	163-4763-35	16V 47uF
C112	163-1063-35	16V 10uF
C113	163-1063-35	16V 10uF
C114	163-1063-35	16V 10uF
C115	163-1063-35	16V 10uF
C116	168-1042-78	16V 0.1uF
C117	163-1063-35	16V 10uF
C118	163-1063-35	16V 10uF
C119	163-1063-35	16V 10uF
C120	166-1011-50	100pF CH
C121	166-1011-50	100pF CH
C122	178-1052-78	1uF
C123	163-1063-35	16V 10uF
C124	163-1063-35	16V 10uF
C125	163-1063-35	16V 10uF
C126	168-1042-78	16V 0.1uF
C127	163-1063-35	16V 10uF
C128	168-1042-78	16V 0.1uF

REF No.	PART No.	DESCRIPTION
C129	163-1073-35	16V 100uF
C130	168-1042-78	16V 0.1uF
C131	163-4753-55	35V 4.7uF
C132	166-1011-50	100pF CH
C133	166-1011-50	100pF CH
C134	166-1011-50	100pF CH
C135	166-1011-50	100pF CH
C136	168-1042-78	16V 0.1uF
C137	168-1042-78	16V 0.1uF
C138	163-1073-15	6.3V 100uF
C139	163-2263-35	16V 22uF
C140	168-4732-78	0.047uF K
C141	043-0540-00	6.3V 10uF
C142	043-0540-00	6.3V 10uF
C143	166-4701-50	47pF CH
C144	166-4701-50	47pF CH
C145	168-1042-78	16V 0.1uF
C146	166-1011-50	100pF CH
C147	163-1063-35	16V 10uF
C148	163-1063-35	16V 10uF
C149	163-1063-35	16V 10uF
C150	166-1011-50	100pF CH
C151	178-2242-78	0.22uF
C152	166-4711-50	470pF CH
C153	166-1011-50	100pF CH
C154	178-1052-78	1uF
C155	168-1042-78	16V 0.1uF
C156	166-1011-50	100pF CH
C157	168-1042-78	16V 0.1uF
C158	163-4763-35	16V 47uF
C159	168-1042-78	16V 0.1uF

REF No.	PART No.	DESCRIPTION
C160	042-0619-51	6.3V 56uF
C161	168-1042-78	16V 0.1uF
C162	042-0423-20	10V 10uF
C163	168-3332-78	0.033uF K
C164	168-3322-55	3300pF K
C165	168-3322-55	3300pF K
C166	168-1042-78	16V 0.1uF
C167	163-1073-15	6.3V 100uF
C168	168-3322-55	3300pF K
C169	168-3322-55	3300pF K
C170	168-2232-55	0.022uF K
C171	168-4712-55	470pF K
C173	168-2242-58	0.22uF B
C174	168-2232-55	0.022uF K
C175	168-2232-55	0.022uF K
C178	168-2232-55	0.022uF K
C181	166-1007-50	10pF CH
C182	166-1007-50	10pF CH
C184	168-1022-55	1000pF K
C185	168-1022-55	1000pF K
C186	168-1042-78	16V 0.1uF
C187	166-1011-50	100pF CH
C188	163-4753-55	35V 4.7uF
C189	168-1042-78	16V 0.1uF
C190	168-1022-55	1000pF K
C191	168-1022-55	1000pF K
C192	163-4753-55	35V 4.7uF
C193	168-1042-78	16V 0.1uF
C194	166-1811-50	180pF CH
C195	168-1042-78	16V 0.1uF
C196	163-4753-55	35V 4.7uF

REF No.	PART No.	DESCRIPTION
C197	042-0619-51	6.3V 56uF
C198	168-1042-78	16V 0.1uF
C199	178-3342-78	0.33uF
C201	168-1022-55	1000pF K
C202	043-0540-00	6.3V 10uF
C203	168-1022-55	1000pF K
C204	168-1022-55	1000pF K
C205	043-0540-00	6.3V 10uF
C206	043-0540-00	6.3V 10uF
C207	168-1022-55	1000pF K
C208	168-1022-55	1000pF K
C209	043-0540-00	6.3V 10uF
C210	163-2273-25	10V 220uF
C211	043-0540-00	6.3V 10uF
C213	166-4711-50	470pF CH
C214	166-4711-50	470pF CH
C215	043-0540-00	6.3V 10uF
C217	166-4711-50	470pF CH
C218	166-4711-50	470pF CH
C219	043-0540-00	6.3V 10uF
C221	166-4711-50	470pF CH
C222	166-4711-50	470pF CH
C223	043-0540-00	6.3V 10uF
C225	166-4711-50	470pF CH
C226	166-4711-50	470pF CH
C227	043-0540-00	6.3V 10uF
C229	166-6811-50	680pF
C230	166-6811-50	680pF
C231	043-0540-00	6.3V 10uF
C233	166-6811-50	680pF
C234	166-6811-50	680pF
C235	043-0540-00	6.3V 10uF
C237	166-6811-50	680pF
C238	166-6811-50	680pF
C239	043-0540-00	6.3V 10uF
C241	166-6811-50	680pF
C242	166-6811-50	680pF
C243	163-1063-35	16V 10uF
C244	168-1042-78	16V 0.1uF
C245	163-1063-35	16V 10uF
C246	168-1042-78	16V 0.1uF
C247	163-2263-15	6.3V 22uF
C249	043-0264-56	270pF
C250	166-2701-50	27pF CH
C251	163-2263-15	6.3V 22uF
C253	043-0264-56	270pF
C254	166-2701-50	27pF CH
C256	163-2263-15	6.3V 22uF
C258	043-0264-56	270pF
C259	166-2701-50	27pF CH
C260	163-2263-15	6.3V 22uF
C262	043-0264-56	270pF
C263	166-2701-50	27pF CH
C265	163-2263-15	6.3V 22uF
C266	043-0264-56	270pF
C267	166-2701-50	27pF CH
C268	163-2263-15	6.3V 22uF
C269	043-0264-56	270pF
C270	166-2701-50	27pF CH
C272	163-2263-15	6.3V 22uF
C273	043-0264-56	270pF
C274	166-2701-50	27pF CH
C275	163-2263-15	6.3V 22uF
C276	043-0264-56	270pF
C277	166-2701-50	27pF CH
C283	163-1063-35	16V 10uF
C284	163-1063-35	16V 10uF
C285	043-0541-00	6.3V 22uF
C286	043-0541-00	6.3V 22uF
C287	043-0541-00	6.3V 22uF
C288	043-0541-00	6.3V 22uF
C289	168-1042-78	16V 0.1uF
C290	168-1042-78	16V 0.1uF
C291	168-1042-78	16V 0.1uF

REF No.	PART No.	DESCRIPTION
C292	168-1042-78	16V 0.1uF
C300	168-1042-78	16V 0.1uF
C301	168-1042-78	16V 0.1uF
C302	163-1063-35	16V 10uF
C303	163-4763-35	16V 47uF
C304	168-1042-78	16V 0.1uF
C305	168-1042-78	16V 0.1uF
C306	163-1063-35	16V 10uF
C307	178-1052-78	1uF
C308	168-1042-78	16V 0.1uF
C309	042-0643-51	16V 100uF LOW-ESR
C310	042-0643-51	16V 100uF LOW-ESR
C311	168-1042-78	16V 0.1uF
C312	178-1052-78	1uF
C313	163-4763-35	16V 47uF
C314	178-1052-78	1uF
C315	178-1052-78	1uF
C316	178-1052-78	1uF
C317	178-1052-78	1uF
C318	178-1052-78	1uF
C319	178-1052-78	1uF
C320	178-1052-78	1uF
C321	178-1052-78	1uF
C322	178-1052-78	1uF
C323	168-1032-55	0.01uF K
C324	163-4763-15	6.3V 47uF
C325	166-3096-50	3pF CJ
C326	042-0643-52	6.3V 1000uF
C327	163-1073-35	16V 100uF
C328	168-1042-78	16V 0.1uF
C329	163-4763-15	6.3V 47uF
C330	163-4763-15	6.3V 47uF
C331	168-1042-78	16V 0.1uF
C332	168-1042-78	16V 0.1uF
C333	168-1042-78	16V 0.1uF
C334	168-1042-78	16V 0.1uF
C336	168-1022-55	1000pF K
C337	163-1063-35	16V 10uF
C338	163-1063-35	16V 10uF
C339	163-4763-35	16V 47uF
C340	168-1042-78	16V 0.1uF
C341	168-1032-55	0.01uF K
C350	166-1021-50	1000pF CH
C351	168-1042-78	16V 0.1uF
C352	168-1042-78	16V 0.1uF
C353	178-1052-78	1uF
C354	042-0643-52	6.3V 1000uF
C355	042-0643-52	6.3V 1000uF
C356	168-2232-55	0.022uF K
C357	043-0510-51	25V 10uF
C358	042-0643-56	16V 470uF M
C359	178-1052-78	1uF
C360	178-1052-78	1uF
C361	042-0643-51	16V 100uF LOW-ESR
C363	168-1045-56	0.1uF Z
C364	168-4732-78	0.047uF K
C365	168-1022-55	1000pF K
C366	166-1511-50	150pF CH
C1100	168-2232-55	0.022uF K
C1101	168-1832-55	0.018uF K
D101	001-0517-90	1SS355
D102	001-0517-90	1SS355
D103	001-0517-90	1SS355
D201	001-0529-29	MA8051-M
D300	001-0517-90	1SS355
D301	001-0517-90	1SS355
D302	001-1305-90	DAN217U-T106
D303	001-1305-90	DAN217U-T106
D304	001-1305-90	DAN217U-T106
D305	001-1305-90	DAN217U-T106
D306	001-1305-90	DAN217U-T106

REF No.	PART No.	DESCRIPTION
D309	001-1305-90	DAN217U-T106
D310	001-1305-90	DAN217U-T106
D311	001-1305-90	DAN217U-T106
D312	001-1305-90	DAN217U-T106
D350	001-0507-90	DAP202K
D351	001-0608-90	D1FS4
IC101	051-3049-90	HA17558AFEL
IC102	051-3049-90	HA17558AFEL
IC103	051-1905-91	AN77L05M
IC104	----------	SAF7730H/N116F
IC105	051-3351-90	BA033CC0FP-E2
IC201	051-6703-08	AK4384VT
IC202	051-6703-08	AK4384VT
IC203	051-3026-90	NJM4580V
IC204	051-3026-90	NJM4580V
IC205	051-3026-90	NJM4580V
IC206	051-3026-90	NJM4580V
IC300	051-7243-48	SN74AHCT1G08 DCKR
IC301	051-3927-90	NJM2505F
IC302	051-5306-90	MM1117XF
IC303	051-5306-90	MM1117XF
IC304	051-5306-90	MM1117XF
IC305	051-5336-90	MM1227XFBE
IC306	051-5326-90	TK15420MTL
IC307	051-3927-90	NJM2505F
IC350	051-3924-90	MD1424R
J300	074-1030-00	MINI DIN 8P
J301	075-0385-00	JACK
J302	074-3014-82	SOCKET(32P)
L101	010-2003-04	30uH
L102	010-2279-50	4.7uH
L103	010-2279-50	4.7uH
L104	010-3105-62	1k ohm/100MHz
L105	010-3105-62	1k ohm/100MHz
L106	010-3105-62	1k ohm/100MHz
L107	010-3105-62	1k ohm/100MHz
L108	010-3109-63	1k ohm/100MHz
L109	010-3105-62	1k ohm/100MHz
L110	010-3105-62	1k ohm/100MHz
L111	010-3103-64	1.5k ohm/100MHz
L112	010-3105-62	1k ohm/100MHz
L113	010-3105-62	1k ohm/100MHz
L201	010-3103-64	1.5k ohm/100MHz
L202	010-3103-64	1.5k ohm/100MHz
L203	010-3105-62	1k ohm/100MHz
L204	010-3103-64	1.5k ohm/100MHz
L205	010-3103-64	1.5k ohm/100MHz
L206	010-3105-62	1k ohm/100MHz
L207	010-3103-64	1.5k ohm/100MHz
L208	010-3103-64	1.5k ohm/100MHz
L209	010-3103-64	1.5k ohm/100MHz
L210	010-3103-64	1.5k ohm/100MHz
L211	010-3103-64	1.5k ohm/100MHz
L212	010-3103-64	1.5k ohm/100MHz
L213	010-3103-64	1.5k ohm/100MHz
L214	010-3103-64	1.5k ohm/100MHz
L300	010-2279-50	4.7uH
L301	010-3406-66	NLV25 22uH J
L302	010-2279-50	4.7uH
L350	010-3404-53	33uH
L351	010-3041-90	10uH
P201	076-0714-20	OUTLET SOCKET
P300	076-3011-76	26P
P302	076-0312-04	4P
Q102	190-1298-00	2SA1298
Q103	125-2026-95	UN521N
Q104	190-1298-00	2SA1298
Q105	125-2026-95	UN521N
Q106	125-7005-90	PHK04P02T
Q201	193-1306-00	2SD1306
Q202	193-1306-00	2SD1306
Q203	193-1306-00	2SD1306
Q204	193-1306-00	2SD1306

REF No.	PART No.	DESCRIPTION
Q205	193-1306-00	2SD1306
Q206	193-1306-00	2SD1306
Q207	193-1306-00	2SD1306
Q208	193-1306-00	2SD1306
Q209	125-0021-95	DTA143ZUA-T106
Q210	125-0021-95	DTA143ZUA-T106
Q350	190-1586-00	2SA1586 O,Y,G
Q351	125-2026-92	UN5212
Q352	125-2026-92	UN5212
R101	119-1041-15	1/10W 100k ohm
R102	119-1011-15	1/10W 100 ohm
R104	119-0000-05	1/10W 0 ohm JW
R105	119-0000-05	1/10W 0 ohm JW
R106	119-1031-15	1/10W 10k ohm
R107	119-1031-15	1/10W 10k ohm
R108	119-1031-15	1/10W 10k ohm
R109	119-1021-15	1/10W 1k ohm
R110	119-1031-15	1/10W 10k ohm
R111	119-1021-15	1/10W 1k ohm
R112	119-2231-15	1/10W 22k ohm
R113	119-2231-15	1/10W 22k ohm
R114	119-1011-15	1/10W 100 ohm
R115	119-4731-15	1/10W 47k ohm
R116	119-1831-15	1/10W 18k ohm
R117	119-4731-15	1/10W 47k ohm
R118	119-1831-15	1/10W 18k ohm
R119	119-4731-15	1/10W 47k ohm
R120	119-1831-15	1/10W 18k ohm
R121	119-4731-15	1/10W 47k ohm
R122	119-1831-15	1/10W 18k ohm
R123	119-1031-15	1/10W 10k ohm
R124	119-1031-15	1/10W 10k ohm
R125	119-1031-15	1/10W 10k ohm
R126	119-1031-15	1/10W 10k ohm
R127	119-1031-15	1/10W 10k ohm
R128	119-1021-15	1/10W 1k ohm
R129	119-1221-15	1/10W 1.2k ohm
R130	119-1041-15	1/10W 100k ohm
R131	119-1241-15	1/10W 120k ohm
R132	119-1031-15	1/10W 10k ohm
R133	119-2231-15	1/10W 22k ohm
R134	119-1031-15	1/10W 10k ohm
R135	119-2231-15	1/10W 22k ohm
R136	119-2231-15	1/10W 22k ohm
R137	119-1031-15	1/10W 10k ohm
R138	119-2231-15	1/10W 22k ohm
R139	119-1031-15	1/10W 10k ohm
R140	119-1001-15	1/10W 10 ohm
R141	119-1041-15	1/10W 100k ohm
R142	119-8231-15	1/10W 82k ohm
R143	119-8231-15	1/10W 82k ohm
R144	119-1041-15	1/10W 100k ohm
R145	032-0140-89	1/10W 47k ohm F
R146	032-0140-89	1/10W 47k ohm F
R147	032-0140-89	1/10W 47k ohm F
R148	032-0140-89	1/10W 47k ohm F
R149	032-0140-89	1/10W 47k ohm F
R150	032-0140-89	1/10W 47k ohm F
R151	032-0140-89	1/10W 47k ohm F
R152	032-0140-89	1/10W 47k ohm F
R153	119-1031-15	1/10W 10k ohm
R154	119-8221-15	1/10W 8.2k ohm
R155	119-1011-15	1/10W 100 ohm
R156	119-1011-15	1/10W 100 ohm
R158	119-4721-15	1/10W 4.7k ohm
R159	119-4721-15	1/10W 4.7k ohm
R160	119-1011-15	1/10W 100 ohm
R161	119-1001-15	1/10W 10 ohm
R162	119-1011-15	1/10W 100 ohm
R163	119-4721-15	1/10W 4.7k ohm
R164	119-1011-15	1/10W 100 ohm
R165	119-1011-15	1/10W 100 ohm
R166	119-1031-15	1/10W 10k ohm
R167	119-1031-15	1/10W 10k ohm

REF No.	PART No.	DESCRIPTION
R168	119-1031-15	1/10W 10k ohm
R169	119-1011-15	1/10W 100 ohm
R170	119-4721-15	1/10W 4.7k ohm
R171	119-1031-15	1/10W 10k ohm
R172	119-1011-15	1/10W 100 ohm
R173	119-1011-15	1/10W 100 ohm
R174	119-1031-15	1/10W 10k ohm
R175	119-1011-15	1/10W 100 ohm
R176	119-1011-15	1/10W 100 ohm
R177	119-1031-15	1/10W 10k ohm
R178	119-1021-15	1/10W 1k ohm
R179	119-0000-05	1/10W 0 ohm JW
R180	119-0000-05	1/10W 0 ohm JW
R181	119-0000-05	1/10W 0 ohm JW
R182	119-0000-05	1/10W 0 ohm JW
R183	119-0000-05	1/10W 0 ohm JW
R201	119-1021-15	1/10W 1k ohm
R202	119-1011-15	1/10W 100 ohm
R203	119-2711-15	1/10W 270 ohm
R204	119-2711-15	1/10W 270 ohm
R205	119-2711-15	1/10W 270 ohm
R206	119-1011-15	1/10W 100 ohm
R207	119-2711-15	1/10W 270 ohm
R208	119-2711-15	1/10W 270 ohm
R209	119-2711-15	1/10W 270 ohm
R210	116-6801-15	1/4W 68 ohm
R211	119-1031-15	1/10W 10k ohm
R212	119-1031-15	1/10W 10k ohm
R213	119-4731-15	1/10W 47k ohm
R214	119-1831-15	1/10W 18k ohm
R215	119-1031-15	1/10W 10k ohm
R216	119-1031-15	1/10W 10k ohm
R217	119-1031-15	1/10W 10k ohm
R218	119-4731-15	1/10W 47k ohm
R219	119-1831-15	1/10W 18k ohm
R220	119-1031-15	1/10W 10k ohm
R221	119-1031-15	1/10W 10k ohm
R222	119-1031-15	1/10W 10k ohm
R223	119-4731-15	1/10W 47k ohm
R224	119-1831-15	1/10W 18k ohm
R225	119-1031-15	1/10W 10k ohm
R226	119-1031-15	1/10W 10k ohm
R227	119-1031-15	1/10W 10k ohm
R228	119-4731-15	1/10W 47k ohm
R229	119-1831-15	1/10W 18k ohm
R230	119-1031-15	1/10W 10k ohm
R231	119-1031-15	1/10W 10k ohm
R232	119-1031-15	1/10W 10k ohm
R233	119-4731-15	1/10W 47k ohm
R234	119-1231-15	1/10W 12k ohm
R235	119-1031-15	1/10W 10k ohm
R236	119-1031-15	1/10W 10k ohm
R237	119-1031-15	1/10W 10k ohm
R238	119-4731-15	1/10W 47k ohm
R239	119-1231-15	1/10W 12k ohm
R240	119-1031-15	1/10W 10k ohm
R241	119-1031-15	1/10W 10k ohm
R242	119-1031-15	1/10W 10k ohm
R243	119-4731-15	1/10W 47k ohm
R244	119-1231-15	1/10W 12k ohm
R245	119-1031-15	1/10W 10k ohm
R246	119-1031-15	1/10W 10k ohm
R247	119-1031-15	1/10W 10k ohm
R248	119-4731-15	1/10W 47k ohm
R249	119-1231-15	1/10W 12k ohm
R250	119-1031-15	1/10W 10k ohm
R251	119-4731-15	1/10W 47k ohm
R252	119-3311-15	1/10W 330 ohm
R253	119-1021-15	1/10W 1k ohm
R254	119-1041-15	1/10W 100k ohm
R255	119-4731-15	1/10W 47k ohm
R256	119-3311-15	1/10W 330 ohm
R257	119-1021-15	1/10W 1k ohm
R258	119-1041-15	1/10W 100k ohm

REF No.	PART No.	DESCRIPTION
R259	119-4731-15	1/10W 47k ohm
R260	119-3311-15	1/10W 330 ohm
R261	119-1021-15	1/10W 1k ohm
R262	119-1041-15	1/10W 100k ohm
R263	119-4731-15	1/10W 47k ohm
R264	119-3311-15	1/10W 330 ohm
R265	119-1021-15	1/10W 1k ohm
R266	119-1041-15	1/10W 100k ohm
R267	119-4731-15	1/10W 47k ohm
R268	119-3311-15	1/10W 330 ohm
R269	119-1021-15	1/10W 1k ohm
R270	119-1041-15	1/10W 100k ohm
R271	119-4731-15	1/10W 47k ohm
R272	119-3311-15	1/10W 330 ohm
R273	119-1021-15	1/10W 1k ohm
R274	119-1041-15	1/10W 100k ohm
R275	119-4731-15	1/10W 47k ohm
R276	119-3311-15	1/10W 330 ohm
R277	119-1021-15	1/10W 1k ohm
R278	119-1041-15	1/10W 100k ohm
R279	119-4731-15	1/10W 47k ohm
R280	119-3311-15	1/10W 330 ohm
R281	119-1021-15	1/10W 1k ohm
R282	119-1041-15	1/10W 100k ohm
R291	119-0000-05	1/10W 0 ohm JW
R292	119-0000-05	1/10W 0 ohm JW
R293	119-0000-05	1/10W 0 ohm JW
R294	119-0000-05	1/10W 0 ohm JW
R295	119-0000-05	1/10W 0 ohm JW
R296	119-0000-05	1/10W 0 ohm JW
R297	119-0000-05	1/10W 0 ohm JW
R298	119-0000-05	1/10W 0 ohm JW
R300	119-2211-15	1/10W 220 ohm
R302	032-0140-12	1/10W 75 ohm F
R303	119-4721-15	1/10W 4.7k ohm
R304	119-3901-15	1/10W 39 ohm
R305	119-2221-15	1/10W 2.2k ohm
R306	119-1031-15	1/10W 10k ohm
R307	119-7501-15	1/10W 75 ohm
R308	119-2221-15	1/10W 2.2k ohm
R309	119-4721-15	1/10W 4.7k ohm
R310	119-4731-15	1/10W 47k ohm
R311	119-1031-15	1/10W 10k ohm
R312	119-1011-15	1/10W 100 ohm
R313	119-7501-15	1/10W 75 ohm
R314	119-7501-15	1/10W 75 ohm
R315	119-7501-15	1/10W 75 ohm
R320	119-7501-15	1/10W 75 ohm
R329	119-2211-15	1/10W 220 ohm
R330	119-2211-15	1/10W 220 ohm
R331	119-2211-15	1/10W 220 ohm
R332	119-2211-15	1/10W 220 ohm
R350	119-1031-15	1/10W 10k ohm
R351	119-1041-15	1/10W 100k ohm
R352	032-0164-50	0.1ohm F
R353	032-0164-50	0.1ohm F
R354	119-1051-15	1/10W 1M ohm
R355	032-0164-50	0.1ohm F
R356	032-0164-50	0.1ohm F
R357	119-3301-15	1/10W 33 ohm
R358	032-0164-50	0.1ohm F
R359	032-0164-50	0.1ohm F
R360	119-1031-15	1/10W 10k ohm
R361	119-5631-15	1/10W 56k ohm
R362	119-1031-15	1/10W 10k ohm
R363	119-1031-15	1/10W 10k ohm
R364	032-0140-53	1/10W 2.2k ohm F
R365	032-0140-56	1/10W 12k ohm F
R366	119-1031-15	1/10W 10k ohm
R367	119-1001-15	1/10W 10 ohm
SUP101	060-0122-20	DSP-141N-S00B
X101	061-3537-90	41.6MHz
PWB	039-2906-00	PWB(WITHOUT COMPONENTS)

Joint PWB(B2) section

REF No.	PART No.	DESCRIPTION
C1100	163-1073-35	16V 100uF
C1102	172-1041-11	0.1uF
C1103	168-1042-78	16V 0.1uF
C1104	168-1042-78	16V 0.1uF
D1101	001-7038-92	CL-221HR-C-TS
D1102	001-7064-92	CL-170HR-CD-T
D1103	001-0516-90	MA111
D1104	001-0516-90	MA111
D1105	001-4305-20	UDZSTE-17 5.6B
IC1100	051-5806-01	GP1S93

REF No.	PART No.	DESCRIPTION
IC1101	051-5806-01	GP1S93
IC1102	051-1014-08	TA7291F
J1100	074-3014-76	26P
J1101	074-3014-82	SOCKET(32P)
P1100	076-3011-82	PLUG(32P)
P1101	076-3019-10	PLUG(32)
P1102	076-0478-52	2P
P1103	076-3011-82	PLUG(32P)
Q1100	125-2026-95	UN521N
R1100	116-5611-15	1/4W 560 ohm

REF No.	PART No.	DESCRIPTION
R1101	116-5611-15	1/4W 560 ohm
R1102	119-3321-15	1/10W 3.3k ohm
R1103	119-1821-15	1/10W 1.8k ohm
R1104	119-5611-15	1/10W 560 ohm
R1105	119-2201-15	1/10W 22 ohm
S1100	013-6312-50	SKRP-ABE-010
S1101	013-6312-50	SKRP-ABE-010
PWB	039-2914-00	PWB(WITHOUT COMPONENTS)

Main PWB(B3) section

REF No.	PART No.	DESCRIPTION
C400	178-4742-78	0.47uF
C401	178-4742-78	0.47uF
C402	178-4742-78	0.47uF
C403	178-4742-78	0.47uF
C404	168-1022-55	1000pF K
C405	168-1022-55	1000pF K
C406	168-1022-55	1000pF K
C407	168-1022-55	1000pF K
C408	168-1022-55	1000pF K
C409	168-1022-55	1000pF K
C410	168-1022-55	1000pF K
C411	168-1022-55	1000pF K
C412	042-0627-90	16V 100uF
C413	042-0627-90	16V 100uF
C414	042-0592-58	16V 10uF
C415	163-2253-65	50V 2.2uF
C416	178-4742-78	0.47uF
C417	178-1052-78	1uF
C418	042-1447-00	16V 2200uF
C419	172-1041-11	0.1uF
C420	168-1022-55	1000pF K
C421	172-2241-11	0.22uF
C422	042-1447-00	16V 2200uF
C423	168-1042-78	16V 0.1uF
C424	042-0635-51	16V 39uF
C425	168-1042-78	16V 0.1uF
C426	168-1042-78	16V 0.1uF
C427	168-1032-55	0.01uF K
C428	168-1032-55	0.01uF K
C429	043-0506-50	0.1uF
C430	163-4763-35	16V 47uF
C431	042-0472-91	16V 47uF
C432	168-1042-78	16V 0.1uF
C433	178-3342-78	0.33uF
C434	163-3363-45	25V 33uF
C435	042-0643-56	16V 470uF M
C436	042-0643-56	16V 470uF M
C437	042-0643-51	16V 100uF LOW-ESR
C438	168-1042-78	16V 0.1uF
C439	042-0627-90	16V 100uF
C440	042-0595-84	10V 100uF
C441	168-1042-78	16V 0.1uF
C442	163-2263-35	16V 22uF
C443	168-4732-78	0.047uF K
C444	043-0561-92	0.47uF
C445	178-1052-78	1uF
C446	166-1011-50	100pF CH
C447	166-1011-50	100pF CH
C448	168-1045-56	0.1uF Z
C449	166-1011-50	100pF CH
C450	168-1022-55	1000pF K
C451	166-1011-50	100pF CH
C452	166-1011-50	100pF CH
C453	166-1011-50	100pF CH
C454	166-1011-50	100pF CH
C460	042-0643-51	16V 100uF LOW-ESR
C461	042-0423-97	16V 10uF
C462	168-1042-78	16V 0.1uF

REF No.	PART No.	DESCRIPTION
C463	168-1042-78	16V 0.1uF
C464	042-0423-20	10V 10uF
C465	042-0423-20	10V 10uF
C466	168-1042-78	16V 0.1uF
C467	042-0423-20	10V 10uF
C468	168-1042-78	16V 0.1uF
C469	168-1042-78	16V 0.1uF
C470	163-1073-35	16V 100uF
C471	168-1042-78	16V 0.1uF
C472	168-1042-78	16V 0.1uF
C473	168-1042-78	16V 0.1uF
C474	042-0630-50	16V 100uF
C475	042-0630-50	16V 100uF
C476	168-1045-56	0.1uF Z
C477	168-1042-78	16V 0.1uF
C478	168-1042-78	16V 0.1uF
C479	163-4763-15	6.3V 47uF
C480	163-4763-15	6.3V 47uF
C490	168-1022-55	1000pF K
C500	166-1011-50	100pF CH
C501	043-0540-00	6.3V 10uF
C502	166-2201-50	22pF CH
C503	166-1801-50	18pF CH
C504	168-1042-78	16V 0.1uF
C505	168-1042-78	16V 0.1uF
C506	043-0540-00	6.3V 10uF
C507	168-1042-78	16V 0.1uF
C508	043-0551-90	6.3V 4.7uF M
C509	168-1032-55	0.01uF K
C510	168-1032-55	0.01uF K
C511	168-1022-55	1000pF K
C512	166-1011-50	100pF CH
C513	178-1052-78	1uF
C514	168-1042-78	16V 0.1uF
C516	168-1022-55	1000pF K
C517	178-1052-78	1uF
C518	178-1052-78	1uF
C519	042-0650-01	5.5V 0.22F
C520	042-0650-01	5.5V 0.22F
C521	163-4763-15	6.3V 47uF
C522	168-1042-78	16V 0.1uF
C570	163-2263-35	16V 22uF
C571	168-1045-56	0.1uF Z
C600	168-1042-78	16V 0.1uF
C601	168-1042-78	16V 0.1uF
C602	043-0540-00	6.3V 10uF
C603	168-1042-78	16V 0.1uF
C604	043-0540-00	6.3V 10uF
C605	168-1042-78	16V 0.1uF
C606	168-4722-55	4700pF K
C607	166-2211-50	220pF CH
C608	168-1042-78	16V 0.1uF
C609	043-0540-00	6.3V 10uF
C610	168-1042-78	16V 0.1uF
C611	166-1007-50	10pF CH
C612	166-1007-50	10pF CH
C613	166-1011-50	100pF CH
C614	168-1042-78	16V 0.1uF
C615	168-1042-78	16V 0.1uF
C616	168-2222-55	2200pF K

REF No.	PART No.	DESCRIPTION
C617	176-2221-50	2200pF CH
C618	168-1042-78	16V 0.1uF
C619	168-1042-78	16V 0.1uF
C620	168-1042-78	16V 0.1uF
C621	168-1042-78	16V 0.1uF
C623	168-1042-78	16V 0.1uF
C624	043-0540-00	6.3V 10uF
C625	168-1042-78	16V 0.1uF
C626	168-1042-78	16V 0.1uF
C627	168-1042-78	16V 0.1uF
C628	168-1042-78	16V 0.1uF
C629	168-1042-78	16V 0.1uF
C630	043-0540-00	6.3V 10uF
C631	168-1042-78	16V 0.1uF
C632	043-0540-00	6.3V 10uF
C633	168-1042-78	16V 0.1uF
C634	168-1042-78	16V 0.1uF
C635	166-1011-50	100pF CH
C636	166-1011-50	100pF CH
C637	168-1042-78	16V 0.1uF
C640	043-0540-00	6.3V 10uF
C641	168-1042-78	16V 0.1uF
C649	166-3301-50	33pF CH
C650	166-1801-50	18pF CH
C670	168-1042-78	16V 0.1uF
C671	168-1042-78	16V 0.1uF
C672	166-5601-50	56pF CH
C673	168-1042-78	16V 0.1uF
C674	168-1042-78	16V 0.1uF
C675	168-1042-78	16V 0.1uF
C676	043-0540-00	6.3V 10uF
C677	168-1042-78	16V 0.1uF
C678	168-1042-78	16V 0.1uF
C679	168-1042-78	16V 0.1uF
C680	168-1042-78	16V 0.1uF
C681	168-1042-78	16V 0.1uF
C682	043-0532-50	10V 10uF
C683	043-0532-50	10V 10uF
C684	168-1042-78	16V 0.1uF
C685	166-1201-50	12pF CH
C686	168-1042-78	16V 0.1uF
C687	178-1052-78	1uF
C688	178-1052-78	1uF
C689	178-1052-78	1uF
C690	178-1052-78	1uF
C691	178-1052-78	1uF
C692	178-1052-78	1uF
C693	178-1052-78	1uF
C698	178-1052-78	1uF
C699	178-1052-78	1uF
C700	168-1042-78	16V 0.1uF
C701	168-1042-78	16V 0.1uF
C702	168-1042-78	16V 0.1uF
C703	168-1042-78	16V 0.1uF
C704	168-1042-78	16V 0.1uF
C705	168-1042-78	16V 0.1uF
C706	168-1042-78	16V 0.1uF
C707	178-1052-78	1uF
C710	176-1021-50	1000pF CH
CCT501	050-0140-52	1/32W 100 ohm x4J

REF No.	PART No.	DESCRIPTION
CCT502	050-0140-52	1/32W 100 ohm x4J
CCT600	050-0140-75	1/32W 330 ohm X4j
CCT601	050-0140-75	1/32W 330 ohm X4j
CCT602	050-0140-75	1/32W 330 ohm X4j
CCT603	050-0140-75	1/32W 330 ohm X4j
CCT604	050-0140-75	1/32W 330 ohm X4j
CCT605	050-0140-75	1/32W 330 ohm X4j
CCT606	050-0140-63	1/32W 47k ohm x4J
CCT607	050-0140-63	1/32W 47k ohm x4J
CCT608	050-0140-75	1/32W 330 ohm X4j
CCT609	050-0140-75	1/32W 330 ohm X4j
CCT610	050-0140-75	1/32W 330 ohm X4j
CCT611	050-0140-75	1/32W 330 ohm X4j
CCT612	050-0140-63	1/32W 47k ohm x4J
CCT613	050-0140-63	1/32W 47k ohm x4J
D400	001-0517-90	1SS355
D401	001-0517-90	1SS355
D402	001-4311-00	ST70-27F-7072
D403	001-0517-90	1SS355
D404	001-0517-90	1SS355
D405	001-0517-90	1SS355
D406	001-0517-90	1SS355
D407	001-2403-90	M1F60
D408	001-0517-90	1SS355
D409	001-0517-90	1SS355
D410	001-2403-90	M1F60
D411	001-0517-90	1SS355
D412	001-0529-26	MA8047-M
D413	001-2403-90	M1F60
D414	001-0517-90	1SS355
D415	001-2403-90	M1F60
D416	001-2403-90	M1F60
D417	001-0517-90	1SS355
D418	001-4310-01	RLZ TE-11 10B
D419	001-4313-51	HZU9B3L
D420	001-0517-90	1SS355
D421	001-2403-90	M1F60
D422	001-0529-43	MA8082-L
D423	001-0517-90	1SS355
D460	001-0517-90	1SS355
D461	001-0517-90	1SS355
D462	001-0517-90	1SS355
D463	001-0517-90	1SS355
D464	001-0529-44	MA8082-M
D501	001-0529-43	MA8082-L
D570	001-4313-50	HZU6A2L
D670	001-0367-91	1SS226
D671	001-0367-91	1SS226
D672	001-0367-91	1SS226
D673	001-0367-91	1SS226
D674	001-0367-91	1SS226
F400	060-8066-90	4A
FIL451	060-3114-51	LFA20-2A1E223MT
FIL452	060-3114-51	LFA20-2A1E223MT
FIL453	060-3114-51	LFA20-2A1E223MT
FIL454	060-3114-51	LFA20-2A1E223MT
FIL455	060-3114-51	LFA20-2A1E223MT
FIL460	060-3114-52	LFA20-2A1
FIL461	060-3114-52	LFA20-2A1
FIL462	060-3114-52	LFA20-2A1
FIL463	060-3114-52	LFA20-2A1
FIL464	060-3114-52	LFA20-2A1
FIL465	060-3114-52	LFA20-2A1
FIL466	060-3114-52	LFA20-2A1
FIL467	060-3114-52	LFA20-2A1
FIL468	060-3114-52	LFA20-2A1
FIL469	060-3114-52	LFA20-2A1
FIL470	060-3114-52	LFA20-2A1
FIL471	060-3114-52	LFA20-2A1
FIL472	060-3114-52	LFA20-2A1
FIL473	060-3114-52	LFA20-2A1
FIL474	060-3114-52	LFA20-2A1
FIL475	060-3114-52	LFA20-2A1
FIL476	060-3114-52	LFA20-2A1

REF No.	PART No.	DESCRIPTION
FIL477	060-3114-52	LFA20-2A1
FIL478	060-3114-52	LFA20-2A1
FIL479	060-3114-52	LFA20-2A1
FIL480	060-3114-52	LFA20-2A1
IC400	051-2057-00	TB2906HQ
IC401	051-3294-90	TA78DS10F
IC402	051-3335-90	AN77L04M
IC403	051-6600-58	HA12187FP
IC404	051-1855-08	TC7W14F
IC460	051-3317-90	LM1086IS-ADJ
IC461	051-3317-90	LM1086IS-ADJ
IC462	051-3289-00	BA09ST
IC500	052-7084-10	uPD70F3339GJ-UEN-A
IC501	051-5440-08	S-80931CNMC-G81
IC502	051-3406-90	NJM2078M
IC503	051-5410-38	BU4820G-TR
IC504	051-9402-68	BR93L56F-W
IC505	051-9402-68	BR93L56F-W
IC600	051-6456-00	YGV629-VZ
IC601	051-7509-90	SN74LV123APWR
IC602	052-7079-10	TC58FVM5B3ATG65
IC603	051-7269-08	SN74AHC2G53HDCTR
IC604	051-7256-08	SN74AHCT1G32DCKR
IC607	051-7256-08	SN74AHCT1G32DCKR
IC670	051-7221-08	TC7SH04F
IC671	051-7221-08	TC7SH04F
IC672	051-7275-08	TC7W32FU TE12L
IC673	051-5336-90	MM1227XFBE
IC674	051-7275-08	TC7W32FU TE12L
IC675	051-7221-08	TC7SH04F
IC676	051-5342-90	NJM2524V
J400	074-1214-00	16P
J401	074-1194-00	13P CE-NET
J402	074-1171-10	DIN 10P WHT
J460	074-2225-92	SOCKET(42P)
J461	074-3014-82	SOCKET(32P)
J463	074-2241-90	SOCKET(40P)
J500	074-3019-60	10P SOCKET
J501	076-0478-55	PLUG
J670	074-1231-08	8P MIN
L401	010-8026-00	210uH
L402	010-3103-64	1.5k ohm/100MHz
L403	010-3103-64	1.5k ohm/100MHz
L462	010-3104-50	30 ohm/100MHz
L464	010-3104-50	30 ohm/100MHz
L465	010-3104-50	30 ohm/100MHz
L466	010-3104-50	30 ohm/100MHz
L467	010-3104-50	30 ohm/100MHz
L468	010-3104-50	30 ohm/100MHz
L469	010-3104-50	30 ohm/100MHz
L500	010-2279-50	4.7uH
L501	010-2279-50	4.7uH
L600	010-3104-50	30 ohm/100MHz
L601	010-2279-50	4.7uH
L602	010-3104-50	30 ohm/100MHz
L606	010-3104-50	30 ohm/100MHz
L607	010-2279-50	4.7uH
L670	010-3104-50	30 ohm/100MHz
L671	010-3104-50	30 ohm/100MHz
P400	076-0349-02	2P
P460	076-3011-82	PLUG(32P)
Q400	190-1298-00	2SA1298
Q401	101-1143-00	2SB1143
Q402	100-1428-00	2SA1428
Q403	125-0020-93	UN511300L
Q404	125-0020-93	UN511300L
Q405	125-2026-95	UN521N
Q406	125-2026-95	UN521N
Q407	190-1736-00	2SA1736

REF No.	PART No.	DESCRIPTION
Q408	101-1143-00	2SB1143
Q409	190-1736-00	2SA1736
Q410	190-1298-00	2SA1298
Q411	190-1736-00	2SA1736
Q412	190-1298-00	2SA1298
Q413	125-2026-92	UN5212
Q414	125-2026-95	UN521N
Q415	190-1576-00	2SA1576A
Q416	125-2017-97	RN1427
Q417	125-2017-97	RN1427
Q418	192-4081-00	2SC4081
Q419	192-4081-00	2SC4081
Q420	125-2026-91	UN5211
Q421	131-1188-00	2SB1188
Q422	193-2118-00	2SD2118F5 Q,R,S
Q423	102-3420-50	2SC3420 GR,BL
Q424	190-1576-00	2SA1576A
Q425	198-0302-50	2SK302 Y,GR
Q426	125-2026-95	UN521N
Q427	125-2026-93	UN5213
Q428	190-1736-00	2SA1736
Q429	125-2026-92	UN5212
Q430	125-2017-97	RN1427
Q431	125-2026-92	UN5212
Q432	125-2026-92	UN5212
Q433	125-2026-92	UN5212
Q460	190-1736-00	2SA1736
Q461	125-2027-97	DTC114YUA
Q462	190-1736-00	2SA1736
Q463	190-1736-00	2SA1736
Q464	125-2026-95	UN521N
Q465	125-2026-95	UN521N
Q466	125-0020-91	UN5111
Q467	125-2026-95	UN521N
Q468	125-9003-92	IMD3
Q469	125-2026-95	UN521N
Q470	192-4081-00	2SC4081
Q471	192-4081-00	2SC4081
Q472	125-9003-92	IMD3
Q500	192-4081-00	2SC4081
Q501	192-4081-00	2SC4081
Q502	192-4081-00	2SC4081
Q503	125-2026-91	UN5211
Q570	125-0020-91	UN5111
Q571	192-4081-00	2SC4081
Q600	125-9025-90	HN1C01FU-TE85N
Q671	125-2026-93	UN5213
Q672	125-2026-93	UN5213
R400	119-1021-15	1/10W 1k ohm
R401	119-1021-15	1/10W 1k ohm
R402	119-1021-15	1/10W 1k ohm
R403	119-1021-15	1/10W 1k ohm
R404	119-1031-15	1/10W 10k ohm
R405	119-1001-15	1/10W 10 ohm
R406	119-1031-15	1/10W 10k ohm
R407	116-1221-15	1/4W 1.2k ohm
R408	116-1221-15	1/4W 1.2k ohm
R409	116-1221-15	1/4W 1.2k ohm
R410	032-0140-50	1/10W 10k ohm F
R411	119-1031-15	1/10W 10k ohm
R412	119-2731-15	1/10W 27k ohm
R413	119-1031-15	1/10W 10k ohm
R414	119-1031-15	1/10W 10k ohm
R415	032-0177-00	2W 0.82ohm
R417	119-1031-15	1/10W 10k ohm
R418	119-1031-15	1/10W 10k ohm
R421	119-1031-15	1/10W 10k ohm
R422	119-1031-15	1/10W 10k ohm
R423	116-1521-15	1/4W 1.5k ohm
R424	116-1521-15	1/4W 1.5k ohm
R427	119-1531-15	1/10W 15k ohm
R428	032-0178-00	1/2W 180ohm
R429	119-4721-15	1/10W 4.7k ohm
R430	119-1031-15	1/10W 10k ohm

REF No.	PART No.	DESCRIPTION
R431	119-2201-15	1/10W 22 ohm
R432	032-0178-00	1/2W 180ohm
R433	119-3321-15	1/10W 3.3k ohm
R434	119-1031-15	1/10W 10k ohm
R435	116-1521-15	1/4W 1.5k ohm
R436	119-5611-15	1/10W 560 ohm
R437	119-3321-15	1/10W 3.3k ohm
R438	119-2231-15	1/10W 22k ohm
R439	119-4731-15	1/10W 47k ohm
R440	119-1031-15	1/10W 10k ohm
R441	116-3311-15	1/4W 330 ohm
R442	119-1031-15	1/10W 10k ohm
R443	116-1521-15	1/4W 1.5k ohm
R444	119-1011-15	1/10W 100 ohm
R445	119-4721-15	1/10W 4.7k ohm
R448	119-3321-15	1/10W 3.3k ohm
R449	119-1031-15	1/10W 10k ohm
R450	119-4711-15	1/10W 470 ohm
R451	119-1031-15	1/10W 10k ohm
R452	116-6801-15	1/4W 68 ohm
R453	032-0178-00	1/2W 180ohm
R454	119-1021-15	1/10W 1k ohm
R455	119-1031-15	1/10W 10k ohm
R456	119-1021-15	1/10W 1k ohm
R457	032-0140-21	1/10W 549k ohm F
R458	119-1021-15	1/10W 1k ohm
R460	119-1031-15	1/10W 10k ohm
R461	116-1221-15	1/4W 1.2k ohm
R462	116-1221-15	1/4W 1.2k ohm
R464	119-1031-15	1/10W 10k ohm
R465	119-1031-15	1/10W 10k ohm
R466	119-3311-15	1/10W 330 ohm
R467	119-3311-15	1/10W 330 ohm
R468	119-3311-15	1/10W 330 ohm
R469	119-3311-15	1/10W 330 ohm
R470	119-3311-15	1/10W 330 ohm
R471	119-3311-15	1/10W 330 ohm
R472	032-0140-66	1/10W 220 ohm F
R473	032-0140-98	1/10W 330 ohm F
R474	032-0140-68	1/10W 680 ohm F
R475	116-2211-15	1/4W 220 ohm
R476	032-0140-11	1/10W 300 ohm F
R477	032-0140-13	1/10W 33 ohm F
R479	119-1031-15	1/10W 10k ohm
R480	119-1031-15	1/10W 10k ohm
R481	119-4731-15	1/10W 47k ohm
R482	119-4731-15	1/10W 47k ohm
R483	119-1021-15	1/10W 1k ohm
R484	119-1021-15	1/10W 1k ohm
R485	119-8221-15	1/10W 8.2k ohm
R486	119-8221-15	1/10W 8.2k ohm
R487	119-1021-15	1/10W 1k ohm
R488	119-1021-15	1/10W 1k ohm
R489	119-2231-15	1/10W 22k ohm
R490	119-2231-15	1/10W 22k ohm
R491	119-1221-15	1/10W 1.2k ohm
R492	119-1001-15	1/10W 10 ohm
R493	119-1001-15	1/10W 10 ohm
R494	119-1001-15	1/10W 10 ohm
R496	032-0178-00	1/2W 180ohm
R497	032-0178-00	1/2W 180ohm
R498	032-0178-00	1/2W 180ohm

REF No.	PART No.	DESCRIPTION
R500	119-1031-15	1/10W 10k ohm
R501	119-2231-15	1/10W 22k ohm
R502	119-1031-15	1/10W 10k ohm
R503	119-1031-15	1/10W 10k ohm
R504	119-1031-15	1/10W 10k ohm
R507	119-1031-15	1/10W 10k ohm
R508	119-1031-15	1/10W 10k ohm
R509	119-1031-15	1/10W 10k ohm
R510	119-1011-15	1/10W 100 ohm
R511	119-4711-15	1/10W 470 ohm
R512	119-1031-15	1/10W 10k ohm
R513	119-1031-15	1/10W 10k ohm
R514	119-1021-15	1/10W 1k ohm
R515	119-1031-15	1/10W 10k ohm
R516	032-0140-16	1/10W 180k ohm F
R517	032-0140-03	1/10W 220k ohm F
R518	119-4741-15	1/10W 470k ohm
R520	119-1041-15	1/10W 100k ohm
R521	119-1041-15	1/10W 100k ohm
R522	119-1031-15	1/10W 10k ohm
R523	119-1031-15	1/10W 10k ohm
R524	119-1041-15	1/10W 100k ohm
R525	119-1031-15	1/10W 10k ohm
R526	119-1031-15	1/10W 10k ohm
R527	119-1031-15	1/10W 10k ohm
R528	032-0140-03	1/10W 220k ohm F
R529	119-2231-15	1/10W 22k ohm
R530	119-1041-15	1/10W 100k ohm
R531	119-1051-15	1/10W 1M ohm
R532	032-0140-67	1/10W 3.3k ohm F
R533	032-0140-52	1/10W 33k ohm F
R534	032-0140-66	1/10W 220 ohm F
R535	119-4731-15	1/10W 47k ohm
R536	032-0140-56	1/10W 12k ohm F
R537	119-1031-15	1/10W 10k ohm
R538	119-1031-15	1/10W 10k ohm
R540	119-1021-15	1/10W 1k ohm
R541	119-1041-15	1/10W 100k ohm
R545	119-1031-15	1/10W 10k ohm
R546	119-1021-15	1/10W 1k ohm
R547	119-1021-15	1/10W 1k ohm
R548	119-1031-15	1/10W 10k ohm
R549	119-1041-15	1/10W 100k ohm
R551	119-1031-15	1/10W 10k ohm
R552	119-1031-15	1/10W 10k ohm
R554	119-1031-15	1/10W 10k ohm
R556	119-1031-15	1/10W 10k ohm
R557	119-1021-15	1/10W 1k ohm
R558	119-1041-15	1/10W 100k ohm
R559	119-1031-15	1/10W 10k ohm
R560	119-1031-15	1/10W 10k ohm
R561	119-1031-15	1/10W 10k ohm
R565	119-1031-15	1/10W 10k ohm
R566	119-1011-15	1/10W 100 ohm
R568	119-1011-15	1/10W 100 ohm
R570	119-2241-15	1/10W 220k ohm
R571	119-4731-15	1/10W 47k ohm
R572	119-1531-15	1/10W 15k ohm
R600	119-4731-15	1/10W 47k ohm
R602	119-4731-15	1/10W 47k ohm
R603	119-4731-15	1/10W 47k ohm
R608	119-4731-15	1/10W 47k ohm

REF No.	PART No.	DESCRIPTION
R609	119-2231-15	1/10W 22k ohm
R610	119-2231-15	1/10W 22k ohm
R611	119-2231-15	1/10W 22k ohm
R612	119-2231-15	1/10W 22k ohm
R615	119-3311-15	1/10W 330 ohm
R616	119-2721-15	1/10W 2.7k ohm
R621	119-1031-15	1/10W 10k ohm
R623	119-1051-15	1/10W 1M ohm
R624	119-0000-05	1/10W 0 ohm JW
R625	119-0000-05	1/10W 0 ohm JW
R626	119-1021-15	1/10W 1k ohm
R627	119-2021-15	1/10W 2k ohm
R628	119-2211-15	1/10W 220 ohm
R631	119-3311-15	1/10W 330 ohm
R633	119-4731-15	1/10W 47k ohm
R634	119-3311-15	1/10W 330 ohm
R635	119-3311-15	1/10W 330 ohm
R636	032-0140-72	1/10W 470 ohm F
R637	119-4731-15	1/10W 47k ohm
R638	119-4731-15	1/10W 47k ohm
R639	119-2211-15	1/10W 220 ohm
R640	119-2211-15	1/10W 220 ohm
R641	119-0000-05	1/10W 0 ohm JW
R642	119-4731-15	1/10W 47k ohm
R643	119-4731-15	1/10W 47k ohm
R645	032-0140-23	1/10W 68 ohm F
R646	032-0140-23	1/10W 68 ohm F
R648	119-1031-15	1/10W 10k ohm
R653	119-1031-15	1/10W 10k ohm
R658	119-0000-05	1/10W 0 ohm JW
R659	119-0000-05	1/10W 0 ohm JW
R661	119-4731-15	1/10W 47k ohm
R662	119-4731-15	1/10W 47k ohm
R670	119-0000-05	1/10W 0 ohm JW
R671	119-1011-15	1/10W 100 ohm
R672	119-1021-15	1/10W 1k ohm
R673	119-2221-15	1/10W 2.2k ohm
R674	119-0000-05	1/10W 0 ohm JW
R675	119-2211-15	1/10W 220 ohm
R676	119-1011-15	1/10W 100 ohm
R679	119-7501-15	1/10W 75 ohm
R680	119-7501-15	1/10W 75 ohm
R681	119-7501-15	1/10W 75 ohm
R682	119-7501-15	1/10W 75 ohm
R683	119-0000-05	1/10W 0 ohm JW
R684	032-0140-12	1/10W 75 ohm F
R685	032-0140-12	1/10W 75 ohm F
R686	032-0140-12	1/10W 75 ohm F
R688	119-1011-15	1/10W 100 ohm
R689	119-1011-15	1/10W 100 ohm
R690	119-1011-15	1/10W 100 ohm
R691	119-0000-05	1/10W 0 ohm JW
TH500	002-0315-00	TN10-3U153JT
VR600	012-6009-53	2.2k ohm B VR
X500	060-1541-90	3.14MHz
X501	061-3522-90	32.768KHz
X502	060-8045-00	PKLCS1212E4001-R
X600	061-3556-90	9.5192MHz
PWB	039-2958-01	PWB(WITHOUT COMPONENTS)

LCD PWB(B4) section

REF No.	PART No.	DESCRIPTION
C7	166-5096-50	5pF CH
C700	178-1052-78	1uF
C701	178-1052-78	1uF
C702	163-1063-35	16V 10uF
C703	168-1032-55	0.01uF K
C704	168-1042-78	16V 0.1uF
C705	168-1042-78	16V 0.1uF
C706	168-1045-56	0.1uF Z

REF No.	PART No.	DESCRIPTION
C707	042-0423-97	16V 10uF
C708	163-3353-65	50V 3.3uF
C709	178-1052-78	1uF
C710	042-0643-57	16V 220uF
C711	042-0423-97	16V 10uF
C712	168-1045-56	0.1uF Z
C713	042-0654-52	16V 10uF
C714	168-2232-55	0.022uF K

REF No.	PART No.	DESCRIPTION
C715	178-1055-79	1uF
C716	178-1055-79	1uF
C717	166-5601-50	56pF CH
C718	168-1032-55	0.01uF K
C719	168-1032-55	0.01uF K
C720	168-1032-55	0.01uF K
C721	168-1032-55	0.01uF K
C722	168-1032-55	0.01uF K

REF No.	PART No.	DESCRIPTION
C723	168-1032-55	0.01uF K
C724	043-0504-50	10V 4.7uF
C725	166-1201-50	12pF CH
C726	166-2201-50	22pF CH
C727	166-8211-50	820pF
C728	166-2001-50	20pF CH
C729	168-6812-55	680pF K
C730	166-5601-50	56pF CH
C731	168-1042-78	16V 0.1uF
C732	168-1032-55	0.01uF K
C733	168-1032-55	0.01uF K
C734	168-4732-78	0.047uF K
C735	168-1032-55	0.01uF K
C736	166-8201-50	82pF CH
C737	168-1032-55	0.01uF K
C738	168-1032-55	0.01uF K
C739	166-1021-50	1000pF CH
C740	178-1052-78	1uF
C741	168-1032-55	0.01uF K
C742	178-1052-78	1uF
C743	178-1052-78	1uF
C744	168-1032-55	0.01uF K
C745	163-4763-35	16V 47uF
C746	166-1007-50	10pF CH
C747	178-1052-78	1uF
C748	168-1032-55	0.01uF K
C749	163-4743-65	50V 0.47uF
C750	168-1042-78	16V 0.1uF
C751	168-1032-55	0.01uF K
C752	178-1052-78	1uF
C753	168-1032-55	0.01uF K
C754	166-2096-50	2pF CK
C755	166-2096-50	2pF CK
C756	168-1045-56	0.1uF Z
C759	168-1042-78	16V 0.1uF
C762	168-1042-78	16V 0.1uF
C763	168-1042-78	16V 0.1uF
C764	168-1042-78	16V 0.1uF
C765	168-1042-78	16V 0.1uF
C766	178-1052-78	1uF
C767	042-0423-97	16V 10uF
C768	178-1052-78	1uF
C769	166-5611-50	560pF CH
C770	168-1042-78	16V 0.1uF
C771	168-1042-78	16V 0.1uF
C772	166-3301-50	33pF CH
C773	168-1042-78	16V 0.1uF
C774	166-3301-50	33pF CH
C775	168-1042-78	16V 0.1uF
C776	168-1022-55	1000pF K
C777	168-1042-78	16V 0.1uF
C778	166-1011-50	100pF CH
C779	168-1022-55	1000pF K
C780	168-1042-78	16V 0.1uF
C781	178-1052-78	1uF
C782	178-2242-78	0.22uF
C783	168-3912-55	390pF K
C784	168-1042-78	16V 0.1uF
C785	166-8201-56	82pF U
C786	042-0423-97	16V 10uF
C787	166-2211-50	220pF CH
C788	178-2242-78	0.22uF
C789	168-1042-78	16V 0.1uF
C790	178-2242-78	0.22uF
C791	163-2263-55	35V 22uF
C792	163-1063-55	35V 10uF
C793	168-1042-78	16V 0.1uF
C794	168-1042-78	16V 0.1uF
C795	168-1042-78	16V 0.1uF
C796	168-1042-78	16V 0.1uF
C797	168-4732-78	0.047uF K
C798	168-1045-56	0.1uF Z
C799	163-1063-35	16V 10uF
C801	166-6801-50	68pF CH

REF No.	PART No.	DESCRIPTION
C805	168-1022-55	1000pF K
C806	168-1022-55	1000pF K
C807	168-1022-55	1000pF K
C808	168-1022-55	1000pF K
C809	166-4711-50	470pF CH
C810	166-4711-50	470pF CH
C811	166-4711-50	470pF CH
C812	166-4711-50	470pF CH
C814	166-4711-50	470pF CH
C816	168-1042-78	16V 0.1uF
C817	168-1042-78	16V 0.1uF
C818	168-1042-78	16V 0.1uF
C819	168-1042-78	16V 0.1uF
C820	163-1073-15	6.3V 100uF
C821	168-1042-78	16V 0.1uF
C822	168-1042-78	16V 0.1uF
C900	042-0630-50	16V 100uF
C901	168-1042-78	16V 0.1uF
C902	163-1063-55	35V 10uF
C903	163-4753-55	35V 4.7uF
C904	168-1022-55	1000pF K
C905	168-2222-55	2200pF K
C906	163-3363-45	25V 33uF
C907	042-0643-50	35V 22uF LOW-ESR
C908	042-0528-50	35V 15uF
C909	163-2273-25	10V 220uF
C910	042-0528-50	35V 15uF
C911	042-0643-50	35V 22uF LOW-ESR
C912	163-1073-35	16V 100uF
C913	163-2273-25	10V 220uF
C914	163-3363-45	25V 33uF
C933	178-2255-79	2.2uF
C934	168-1032-55	0.01uF K
C935	166-1811-50	180pF CH
C936	168-4722-55	4700pF K
C937	168-2232-55	0.022uF K
C938	178-2255-79	2.2uF
C939	168-2232-55	0.022uF K
C940	178-1052-78	1uF
C952	043-0567-90	25V 22uF
C953	043-0549-50	3KV10PF
C954	168-1032-55	0.01uF K
C955	166-1221-50	1200pF CH
C958	168-1022-55	1000pF K
C959	178-1052-78	1uF
C960	168-1032-55	0.01uF K
C961	042-0636-51	16V 47uF
C962	168-1045-56	0.1uF Z
C963	042-0636-51	16V 47uF
C964	168-1045-56	0.1uF Z
C966	042-0416-55	16V 15uF M TAN
CCT700	050-0145-60	1/16W 470 ohm x4
CCT710	050-0145-59	1/16W 22 ohm x4
CCT711	050-0145-60	1/16W 470 ohm x4
CCT712	050-0145-59	1/16W 22 ohm x4
CCT801	050-0145-52	1/16W 1k ohm x4
CCT802	050-0145-52	1/16W 1k ohm x4
CCT803	050-0145-54	1/16W 47k ohm x4
CCT804	050-0145-60	1/16W 470 ohm x4
CCT805	050-0145-54	1/16W 47k ohm x4
D710	001-4305-19	UDZSTE-17 5.1B
D711	001-0517-90	1SS355
D712	001-3211-90	MA335-TX
D713	001-2406-90	1PS226
D714	001-4305-19	UDZSTE-17 5.1B
D801	001-0525-90	IMN10
D802	001-0517-90	1SS355
D810	001-2406-90	1PS226
D811	001-2406-90	1PS226
D812	001-2406-90	1PS226
D813	001-2406-90	1PS226
D818	001-4305-20	UDZSTE-17 5.6B
D819	001-4305-20	UDZSTE-17 5.6B
D820	001-4305-20	UDZSTE-17 5.6B

REF No.	PART No.	DESCRIPTION
D821	001-4305-20	UDZSTE-17 5.6B
D822	001-4305-20	UDZSTE-17 5.6B
D823	001-4305-20	UDZSTE-17 5.6B
D824	001-4305-20	UDZSTE-17 5.6B
D825	001-4305-20	UDZSTE-17 5.6B
D826	001-4305-20	UDZSTE-17 5.6B
D900	001-0517-90	1SS355
D901	001-0517-90	1SS355
D902	001-0517-90	1SS355
D903	001-2606-90	M1FS4
D904	001-0517-90	1SS355
D946	001-1315-90	NSM123TL-E
D961	001-0529-29	MA8051-M
D964	001-1315-90	NSM123TL-E
D965	001-1315-90	NSM123TL-E
F900	060-8058-90	ERBSEOR75U
IC700	051-3019-90	NJM2060V
IC701	051-7256-08	SN74AHCT1G32 DCKR
IC702	051-5313-10	IR3Y29BM
IC703	051-7269-08	SN74AHC2G53 HDCTR
IC710	051-3025-90	NJM2107F
IC711	051-6086-00	LZ9FE30
IC712	051-7281-38	TC7SH14 FUTE85L,F
IC713	051-7281-38	TC7SH14 FUTE85L,F
IC801	052-7066-01	M30102M2-561FP
IC900	051-3913-90	NJM2368E
IC942	125-9023-90	TPCF8402TE85L,F
IC943	125-9023-90	TPCF8402TE85L,F
IC944	051-3925-90	OZ9910ISN-T2
J700	074-2225-92	SOCKET(42P)
J710	074-2226-82	SOCKET
J803	074-2219-54	SOCKET
J804	074-2225-66	SOCKET
J805	074-2225-66	SOCKET
L700	010-3406-68	NLV25 33uH J
L701	010-3406-68	NLV25 33uH J
L702	010-3406-71	NLV25 56uH J
L703	010-4051-90	19.8uH
L710	010-3406-62	NLV25 10uH J
L711	010-3406-64	NLV25 15uH J
L712	010-3406-56	NLV25 3.3uH J
L713	010-3406-54	NLV25 2.2uH J
L800	010-3406-59	NLV25 5.6uH J
L900	010-3010-50	100uH
L901	010-3406-74	NLV25 100uH J
L902	010-3406-74	NLV25 100uH J
L903	010-3057-90	100uH
L904	010-3406-74	NLV25 100uH J
L961	010-3059-90	Choke
P950	076-0568-00	2P
Q700	193-2114-00	2SD2114K
Q701	125-2026-91	UN5211
Q702	125-0025-92	RN2302
Q703	125-2026-91	UN5211
Q704	192-4081-00	2SC4081
Q705	125-2026-91	UN5211
Q706	190-1738-00	2SA1738
Q710	125-2027-94	DTC123JUA
Q711	125-2026-91	UN5211
Q712	192-4081-00	2SC4081
Q803	125-2027-94	DTC123JUA
Q804	125-0021-94	DTA123JUA
Q805	125-0021-94	DTA123JUA
Q806	125-2027-94	DTC123JUA
Q900	192-2873-00	2SC2873
Q942	125-2032-92	RN1302
Q943	190-1576-00	2SA1576A
Q961	125-0025-92	RN2302
R1	119-0000-05	1/10W 0 ohm JW
R700	032-0140-89	1/10W 47k ohm F

REF No.	PART No.	DESCRIPTION
R701	032-0140-63	1/10W 27k ohm F
R702	032-0140-00	1/10W 56k ohm F
R703	032-0140-50	1/10W 10k ohm F
R704	032-0140-79	1/10W 2.7k ohm F
R705	119-2021-15	1/10W 2k ohm
R707	119-1001-15	1/10W 10 ohm
R708	119-1011-15	1/10W 100 ohm
R709	119-9121-15	1/10W 9.1k ohm
R710	119-5621-15	1/10W 5.6k ohm
R711	119-1021-15	1/10W 1k ohm
R712	119-4721-15	1/10W 4.7k ohm
R713	119-2221-15	1/10W 2.2k ohm
R714	119-2221-15	1/10W 2.2k ohm
R715	032-0140-50	1/10W 10k ohm F
R716	119-1021-15	1/10W 1k ohm
R717	119-1031-15	1/10W 10k ohm
R718	119-1011-15	1/10W 100 ohm
R719	032-0140-99	1/10W 39k ohm F
R720	119-4731-15	1/10W 47k ohm
R721	119-1031-15	1/10W 10k ohm
R722	119-3341-15	1/10W 330k ohm
R723	119-3921-15	1/10W 3.9k ohm
R724	119-1031-15	1/10W 10k ohm
R725	032-0140-89	1/10W 47k ohm F
R726	032-0140-54	1/10W 22k ohm F
R727	119-2221-15	1/10W 2.2k ohm
R728	119-2731-15	1/10W 27k ohm
R729	119-2731-15	1/10W 27k ohm
R730	119-2231-15	1/10W 22k ohm
R731	032-0140-80	1/10W 18k ohm F
R732	119-1521-15	1/10W 1.5k ohm
R733	119-3341-15	1/10W 330k ohm
R734	119-2231-15	1/10W 22k ohm
R735	119-2231-15	1/10W 22k ohm
R736	119-5611-15	1/10W 560 ohm
R737	119-5641-15	1/10W 560k ohm
R738	119-1021-15	1/10W 1k ohm
R739	119-3351-15	1/10W 3.3M ohm
R740	119-2231-15	1/10W 22k ohm
R741	119-3931-15	1/10W 39k ohm
R742	119-2231-15	1/10W 22k ohm
R743	119-3931-15	1/10W 39k ohm
R744	119-1051-15	1/10W 1M ohm
R745	119-3311-15	1/10W 330 ohm
R746	119-6821-15	1/10W 6.8k ohm
R747	119-1521-15	1/10W 1.5k ohm
R748	119-5621-15	1/10W 5.6k ohm
R749	119-2231-15	1/10W 22k ohm
R750	119-3931-15	1/10W 39k ohm
R751	119-1011-15	1/10W 100 ohm
R752	119-2231-15	1/10W 22k ohm
R753	119-4731-15	1/10W 47k ohm
R755	032-0140-52	1/10W 33k ohm F
R756	032-0140-00	1/10W 56k ohm F

REF No.	PART No.	DESCRIPTION
R757	119-6811-15	1/10W 680 ohm
R758	119-2221-15	1/10W 2.2k ohm
R759	119-1011-15	1/10W 100 ohm
R760	119-1011-15	1/10W 100 ohm
R761	119-1011-15	1/10W 100 ohm
R762	119-8221-15	1/10W 8.2k ohm
R763	119-5621-15	1/10W 5.6k ohm
R764	032-0140-52	1/10W 33k ohm F
R765	032-0140-89	1/10W 47k ohm F
R766	119-1821-15	1/10W 1.8k ohm
R767	119-4731-15	1/10W 47k ohm
R768	119-4731-15	1/10W 47k ohm
R770	119-4711-15	1/10W 470 ohm
R771	119-4711-15	1/10W 470 ohm
R772	119-4711-15	1/10W 470 ohm
R773	119-3301-15	1/10W 33 ohm
R774	119-3301-15	1/10W 33 ohm
R775	032-0140-55	1/10W 4.7k ohm F
R776	032-0140-87	1/10W 3.6k ohm F
R777	119-4731-15	1/10W 47k ohm
R778	119-2731-15	1/10W 27k ohm
R779	119-6831-15	1/10W 68k ohm
R780	119-1051-15	1/10W 1M ohm
R781	119-6831-15	1/10W 68k ohm
R782	119-1051-15	1/10W 1M ohm
R783	119-2711-15	1/10W 270 ohm
R784	119-2421-15	1/10W 2.4k ohm
R785	119-4721-15	1/10W 4.7k ohm
R786	119-1031-15	1/10W 10k ohm
R787	119-5641-15	1/10W 560k ohm
R788	119-5641-15	1/10W 560k ohm
R789	119-3321-15	1/10W 3.3k ohm
R790	119-2721-15	1/10W 2.7k ohm
R791	119-2241-15	1/10W 220k ohm
R792	119-3311-15	1/10W 330 ohm
R793	119-1011-15	1/10W 100 ohm
R794	119-3331-15	1/10W 33k ohm
R795	119-2031-15	1/10W 20k ohm
R796	119-3921-15	1/10W 3.9k ohm
R797	119-8221-15	1/10W 8.2k ohm
R798	119-1001-15	1/10W 10 ohm
R799	119-1031-15	1/10W 10k ohm
R800	119-2211-15	1/10W 220 ohm
R801	119-2231-15	1/10W 22k ohm
R802	119-4711-15	1/10W 470 ohm
R803	119-4711-15	1/10W 470 ohm
R809	119-1051-15	1/10W 1M ohm
R810	119-3321-15	1/10W 3.3k ohm
R811	119-4731-15	1/10W 47k ohm
R812	119-1021-15	1/10W 1k ohm
R815	119-2231-15	1/10W 22k ohm
R816	119-2231-15	1/10W 22k ohm
R817	119-6811-15	1/10W 680 ohm
R818	119-2211-15	1/10W 220 ohm

REF No.	PART No.	DESCRIPTION
R819	119-2211-15	1/10W 220 ohm
R900	119-1001-15	1/10W 10 ohm
R901	119-1841-15	1/10W 180k ohm
R902	119-6841-15	1/10W 680k ohm
R903	119-3931-15	1/10W 39k ohm
R904	119-3311-15	1/10W 330 ohm
R905	119-6841-15	1/10W 680k ohm
R906	119-2221-15	1/10W 2.2k ohm
R907	119-2231-15	1/10W 22k ohm
R956	119-3931-15	1/10W 39k ohm
R957	119-1031-15	1/10W 10k ohm
R958	119-1541-15	1/10W 150k ohm
R959	119-1041-15	1/10W 100k ohm
R960	119-1051-15	1/10W 1M ohm
R961	119-1021-15	1/10W 1k ohm
R964	119-1021-15	1/10W 1k ohm
R965	119-1021-15	1/10W 1k ohm
R966	119-1021-15	1/10W 1k ohm
R967	119-1021-15	1/10W 1k ohm
R981	032-0140-51	1/10W 15k ohm F
R982	116-6811-15	1/4W 680 ohm
R983	032-0140-05	1/10W 82k ohm F
R984	119-1031-15	1/10W 10k ohm
R985	119-3351-15	1/10W 3.3M ohm
R986	119-1041-15	1/10W 100k ohm
R987	119-1051-15	1/10W 1M ohm
R988	032-0140-90	1/10W 560 ohm F
R992	119-6841-15	1/10W 680k ohm
T900	007-1171-00	TRANS
T901	007-1178-00	OUTPUT-TRANS BLC4126
TM801	073-0762-90	TERMINAL
TM802	073-0762-90	TERMINAL
TM803	073-0762-90	TERMINAL
TM804	073-0762-90	TERMINAL
VR401	012-6009-56	10k ohm B VR
VR402	012-6009-54	4.7k ohm B VR
VR600	012-6009-52	1k ohm B VR
VR700	012-6009-53	2.2k ohm B VR
VR701	012-6009-57	22k ohm B VR
VR702	012-6009-58	33k ohm B VR
VR703	012-6009-58	33k ohm B VR
VR704	012-6009-58	33k ohm B VR
VR705	012-6009-58	33k ohm B VR
VR706	012-6009-54	4.7k ohm B VR
VR707	012-6009-58	33k ohm B VR
X700	061-3524-90	4.433618MHz
X701	061-3520-95	3.57945MHz
X801	060-1531-90	CSTCR4M91G53-RO
PWB	039-2901-00	PWB(WITHOUT COMPONENTS)

Switch PWB(B5) section

REF No.	PART No.	DESCRIPTION
C1000	168-1042-78	16V 0.1uF
C1001	168-1042-78	16V 0.1uF
D1000	001-4305-20	UDZSTE-17 5.6B
D1001	001-7043-91	CL-170UR U-RED
D1002	001-7098-90	CL-190UB2C-X-T
D1003	001-7098-90	CL-190UB2C-X-T
D1004	001-7098-90	CL-190UB2C-X-T
D1005	001-7098-90	CL-190UB2C-X-T
D1006	001-7098-90	CL-190UB2C-X-T
D1007	001-7098-90	CL-190UB2C-X-T
D1008	001-7098-90	CL-190UB2C-X-T
D1009	001-7098-90	CL-190UB2C-X-T
D1010	001-7098-90	CL-190UB2C-X-T
D1011	001-7098-90	CL-190UB2C-X-T
D1012	001-7098-90	CL-190UB2C-X-T
D1013	001-7098-90	CL-190UB2C-X-T
D1014	001-7098-90	CL-190UB2C-X-T

REF No.	PART No.	DESCRIPTION
D1015	001-7098-90	CL-190UB2C-X-T
D1016	001-7098-90	CL-190UB2C-X-T
D1017	001-7098-90	CL-190UB2C-X-T
IR1000	060-4018-90	IR-RECEIVER/RS-771
J1000	074-2236-65	SOCKET(15P)
J1001	074-2236-65	SOCKET(15P)
R1000	119-0000-05	1/10W 0 ohm JW
R1001	119-1021-15	1/10W 1k ohm
R1002	119-3311-15	1/10W 330 ohm
R1003	119-3311-15	1/10W 330 ohm
R1004	119-3311-15	1/10W 330 ohm
R1005	119-4711-15	1/10W 470 ohm
R1006	119-4711-15	1/10W 470 ohm
R1007	119-3311-15	1/10W 330 ohm
R1008	119-3311-15	1/10W 330 ohm
R1009	119-0000-05	1/10W 0 ohm JW

REF No.	PART No.	DESCRIPTION
R1011	119-1021-15	1/10W 1k ohm
S1000	013-6312-50	SKRP-ABE-010
S1001	013-6312-50	SKRP-ABE-010
S1002	013-6312-50	SKRP-ABE-010
S1003	013-6312-50	SKRP-ABE-010
S1004	013-6312-50	SKRP-ABE-010
S1005	013-6312-50	SKRP-ABE-010
S1006	013-6312-50	SKRP-ABE-010
S1007	013-6312-50	SKRP-ABE-010
S1008	013-6312-50	SKRP-ABE-010
S1009	013-6312-50	SKRP-ABE-010
S1010	013-6312-50	SKRP-ABE-010
S1011	013-6312-50	SKRP-ABE-010
S1012	013-6312-50	SKRP-ABE-010
S1013	013-6312-50	SKRP-ABE-010
PWB	039-2902-00	PWB(WITHOUT COMPONENTS)

EXPLODED VIEW / PARTS LIST

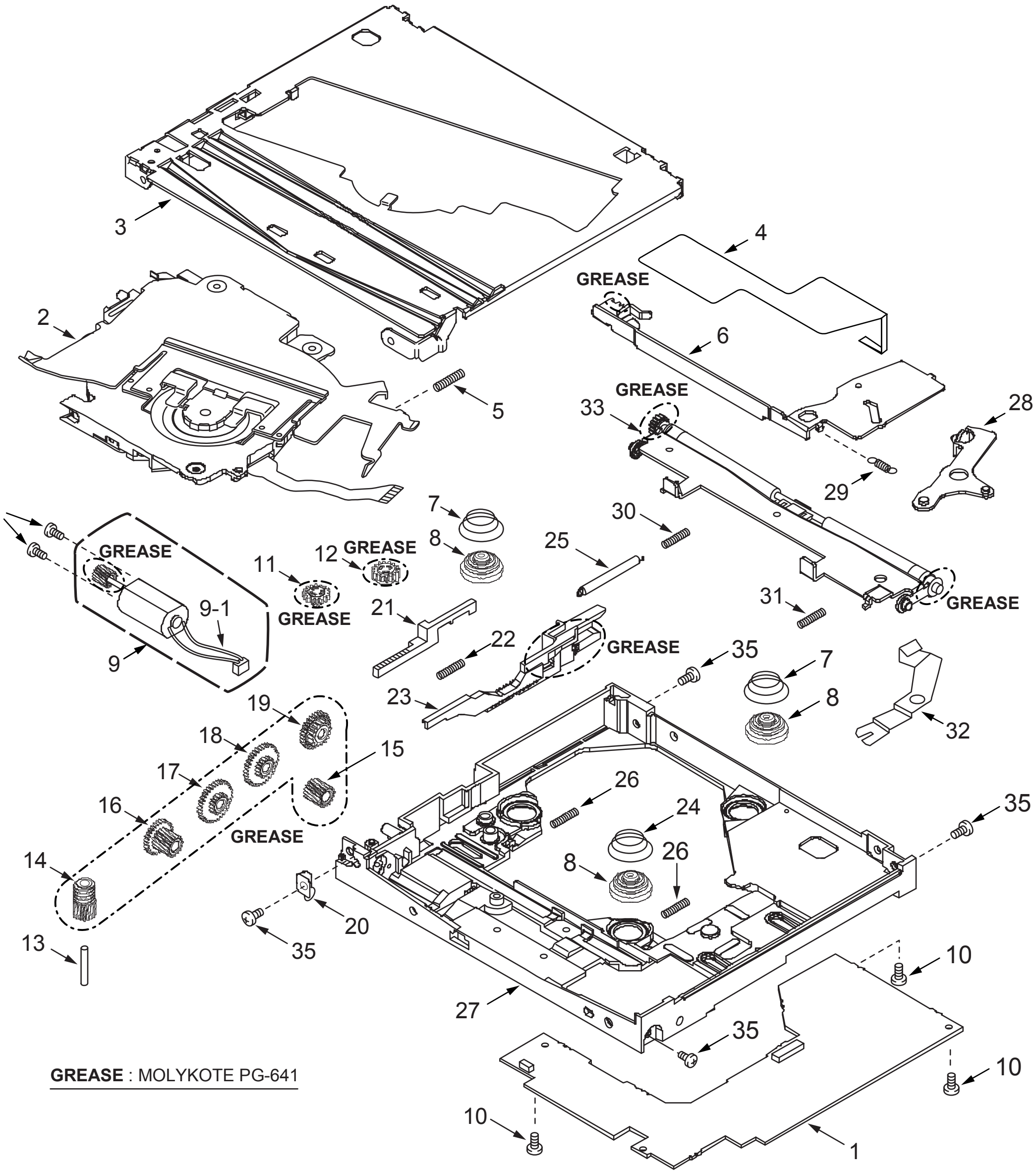

GREASE : MOLYKOTE PG-641

NO.	PART NO.	DESCRIPTION	Q'TY	NO.	PART NO.	DESCRIPTION	Q'TY
1	-----------	Servo PWB	1	18	658-0238-02	Laoding Gear (5)	1
2	658-0244-15	Suspension Assy	1	19	658-0238-03	Laoding Gear (6)	1
3	658-0244-16	Upper Chassis	1	20	658-0238-04	Worm Gear Housing Spring	1
4	658-0244-17	Sensor FPC Assy	1	21	658-0238-05	Clamp Rack	1
5	658-0237-88	Earth Spring	1	22	658-0238-06	Clamp Rack Spring	1
6	658-0239-06	Suspension Lock Lever (L)	1	23	658-0244-18	Slide Lever	1
7	658-0237-90	Suspension Spring	2	24	658-0238-08	Suspension Spring (F)	1
8	658-0239-07	Damper	3	25	658-0238-09	Slide Lever Spring	1
9	658-0237-92	Loading Motor Assy	1	26	658-0238-10	Offset Spring	2
9-1	658-0237-93	Connector w/Lead Wire	1	27	658-0238-11	Main Chassis	1
10	658-0238-23	Screw	3	28	658-0238-12	Suspension Lock Lever (R)	1
11	658-0237-94	Lock Gear (1)	1	29	658-0238-13	Suspension Lock Lever L Spring	1
12	658-0237-95	Lock Gear (2)	1	30	658-0238-15	Feeder Spring (L)	1
13	658-0237-96	Loading Gear Shaft	1	31	658-0238-16	Feeder Spring (R)	1
14	658-0237-97	Laoding Gear (1)	1	32	658-0238-17	Upper Spring	1
15	658-0237-98	Laoding Gear (2)	1	33	658-0244-19	Feeder Arm Assy	1
16	658-0237-99	Laoding Gear (3)	1	34	658-0238-21	Screw	2
17	658-0238-01	Laoding Gear (4)	1	35	658-0244-20	Screw	4

ELECTRICAL PARTS LIST

Servo PWB(BM1) section

REF No.	PART No.	DESCRIPTION
C101	658-0237-26	50V560pF
C102	658-0240-12	0.1uF 10WV
C103	658-0237-29	50V0.001uF
C104	658-0237-29	50V0.001uF
C113	658-0240-12	0.1uF 10WV
C114	658-0240-13	10uF 6.3WV
C115	658-0240-13	10uF 6.3WV
C116	658-0237-29	50V0.001uF
C117	658-0240-13	10uF 6.3WV
C121	658-0237-30	50V6pF
C122	658-0240-13	10uF 6.3WV
C124	658-0240-12	0.1uF 10WV
C125	658-0240-12	0.1uF 10WV
C126	658-0237-28	25V0.027uF
C127	658-0237-27	16V0.047uF
C128	658-0240-12	0.1uF 10WV
C129	658-0237-25	50V100pF
C131	658-0237-26	50V560pF
C132	658-0237-26	50V560pF
C133	658-0240-12	0.1uF 10WV
C134	658-0240-12	0.1uF 10WV
C136	658-0240-12	0.1uF 10WV
C137	658-0240-13	10uF 6.3WV
C141	658-0237-24	16V0.01uF
C142	658-0240-12	0.1uF 10WV
C143	658-0240-12	0.1uF 10WV
C144	658-0240-12	0.1uF 10WV
C145	658-0240-12	0.1uF 10WV
C151	658-0240-12	0.1uF 10WV
C152	658-0237-21	6.3V47uF Tan
C153	658-0240-12	0.1uF 10WV
C154	658-0237-21	6.3V47uF Tan
C201	658-0240-12	0.1uF 10WV
C202	658-0240-12	0.1uF 10WV
C203	658-0240-12	0.1uF 10WV
C204	658-0240-12	0.1uF 10WV
C205	658-0240-12	0.1uF 10WV
C206	658-0237-25	50V100pF
C207	658-0240-13	10uF 6.3WV
C208	658-0240-13	10uF 6.3WV
C211	658-0240-12	0.1uF 10WV
C213	658-0237-25	50V100pF
C214	658-0237-25	50V100pF
C215	658-0237-24	16V0.01uF
C216	658-0237-24	16V0.01uF
C221	658-0244-06	Ceramic,50WV22PF
C222	658-0244-06	Ceramic,50WV22PF
C223	658-0240-12	0.1uF 10WV
C224	658-0240-12	0.1uF 10WV
C225	658-0240-12	0.1uF 10WV
C226	658-0240-12	0.1uF 10WV
C231	658-0237-24	16V0.01uF
C232	658-0240-12	0.1uF 10WV
C234	658-0237-24	16V0.01uF
C235	658-0240-13	10uF 6.3WV
C236	658-0240-12	0.1uF 10WV
C237	658-0237-32	16V0.022uF
C239	658-0237-33	50V47pF
C240	658-0240-12	0.1uF 10WV
C241	658-0240-12	0.1uF 10WV
C242	658-0237-29	50V0.001uF
C243	658-0240-12	0.1uF 10WV
C244	658-0237-34	50V0.0056uF
C245	658-0237-29	50V0.001uF
C246	658-0237-29	50V0.001uF
C247	658-0237-29	50V0.001uF
C248	658-0237-26	50V560pF
C249	658-0237-26	50V560pF
C250	658-0240-12	0.1uF 10WV
C251	658-0237-35	50V0.0022uF
C252	658-0237-36	50V470pF
C253	658-0240-12	0.1uF 10WV
C261	658-0240-12	0.1uF 10WV
C262	658-0240-12	0.1uF 10WV
C263	658-0240-12	0.1uF 10WV
C264	658-0240-12	0.1uF 10WV
C265	658-0240-12	0.1uF 10WV
C266	658-0240-12	0.1uF 10WV
C271	658-0240-12	0.1uF 10WV
C272	658-0240-12	0.1uF 10WV
C275	658-0240-12	0.1uF 10WV
C311	658-0240-12	0.1uF 10WV
C312	658-0244-07	Ceramic,50WV0.1uF
C313	658-0240-12	0.1uF 10WV
C314	658-0244-07	Ceramic,50WV0.1uF
C315	658-0240-12	0.1uF 10WV
C316	658-0240-12	0.1uF 10WV
C321	658-0240-12	0.1uF 10WV
C322	658-0244-07	Ceramic,50WV0.1uF
C323	658-0240-12	0.1uF 10WV
C324	658-0240-12	0.1uF 10WV
C325	658-0240-12	0.1uF 10WV
C401	658-0237-29	50V0.001uF
C402	658-0237-29	50V0.001uF
C403	658-0237-29	50V0.001uF
C404	658-0237-29	50V0.001uF
C405	658-0240-12	0.1uF 10WV
C406	658-0240-14	47uF 6.3WV
C411	658-0244-07	Ceramic,50WV0.1uF
C412	658-0240-43	10uF 16WV
C413	658-0240-42	1uF 6.3WV
C414	658-0240-14	47uF 6.3WV
C421	658-0244-07	Ceramic,50WV0.1uF
C422	658-0240-14	47uF 6.3WV
C423	658-0240-12	0.1uF 10WV
C431	658-0240-12	0.1uF 10WV
C432	658-0240-12	0.1uF 10WV
C433	658-0240-12	0.1uF 10WV
C441	658-0240-12	0.1uF 10WV
C501	658-0237-25	50V100pF
C502	658-0237-25	50V100pF
C503	658-0237-25	50V100pF
C504	658-0237-25	50V100pF
C505	658-0237-25	50V100pF
C506	658-0237-25	50V100pF
C507	658-0237-25	50V100pF
C508	658-0237-25	50V100pF
C509	658-0237-25	50V100pF
C511	658-0240-13	10uF 6.3WV
C512	658-0240-13	10uF 6.3WV
C513	658-0237-25	50V100pF
C514	658-0240-12	0.1uF 10WV
C515	658-0237-25	50V100pF
C516	658-0240-12	0.1uF 10WV
C517	658-0237-25	50V100pF
C518	658-0240-12	0.1uF 10WV
C521	658-0240-12	0.1uF 10WV
C522	658-0240-13	10uF 6.3WV
C523	658-0240-13	10uF 6.3WV
C524	658-0240-12	0.1uF 10WV
C525	658-0240-12	0.1uF 10WV
C526	658-0240-13	10uF 6.3WV
C527	658-0240-12	0.1uF 10WV
C528	658-0240-12	0.1uF 10WV
C529	658-0240-12	0.1uF 10WV
C530	658-0240-13	10uF 6.3WV
C531	658-0240-13	10uF 6.3WV
C532	658-0240-12	0.1uF 10WV
C534	658-0240-12	0.1uF 10WV
C541	658-0240-13	10uF 6.3WV
C542	658-0240-13	10uF 6.3WV
C543	658-0240-12	0.1uF 10WV
C544	658-0240-12	0.1uF 10WV
C545	658-0240-12	0.1uF 10WV
C546	658-0240-12	0.1uF 10WV
C547	658-0240-12	0.1uF 10WV
C548	658-0240-12	0.1uF 10WV
C551	658-0240-12	0.1uF 10WV
C552	658-0240-12	0.1uF 10WV
C553	658-0240-12	0.1uF 10WV
C554	658-0240-12	0.1uF 10WV
C555	658-0240-12	0.1uF 10WV
C556	658-0240-12	0.1uF 10WV
C557	658-0237-25	50V100pF
C561	658-0240-12	0.1uF 10WV
C601	658-0240-42	1uF 6.3WV
C602	658-0237-25	50V100pF
C603	658-0237-25	50V100pF
C604	658-0237-25	50V100pF
C605	658-0237-25	50V100pF
C606	658-0237-25	50V100pF
C607	658-0237-25	50V100pF
C608	658-0237-25	50V100pF
C609	658-0237-25	50V100pF
C611	658-0240-42	1uF 6.3WV
C612	658-0237-25	50V100pF
C613	658-0237-25	50V100pF
C614	658-0237-25	50V100pF
C616	658-0237-25	50V100pF
C621	658-0240-12	0.1uF 10WV
C622	658-0237-25	50V100pF
C623	658-0240-12	0.1uF 10WV
C631	658-0240-12	0.1uF 10WV
C641	658-0240-12	0.1uF 10WV
C651	658-0240-12	0.1uF 10WV
C652	658-0240-13	10uF 6.3WV
C653	658-0240-12	0.1uF 10WV
C701	658-0240-44	330PF 50WV
C702	658-0240-44	330PF 50WV
C703	658-0244-08	Ceramic, 50WV120PF
C722	658-0240-13	10uF 6.3WV
C723	658-0240-12	0.1uF 10WV
CN101	658-0237-47	Connector 30P
CN201	658-0237-46	Connector 40P
CN301	658-0237-50	Connector 4P
CN302	658-0237-49	Connector 2P
CN303	658-0237-48	Connector 20P
CN401	658-0244-12	Connector,12P
CN701	658-0237-47	Connector 30P
D311	658-0237-19	MA721TX
IC101	658-0237-01	AN8703FH-V
IC201	658-0240-01	MNZS26EDCUB
IC271	658-0237-04	YEAMT7ST08UL
IC275	658-0244-01	C0JBAZ001014
IC311	658-0237-08	C0GBY0000012
IC321	658-0237-09	C0GBH0000006
IC411	658-0240-41	YEAMC78L05E2
IC421	658-0244-02	YEAM17805FP
IC431	658-0240-02	C0JBAA000102
IC441	658-0237-03	MN13821JP

REF No.	PART No.	DESCRIPTION
IC501	658-0245-01	C1AB00001622
IC561	658-0244-01	C0JBAZ001014
IC601	658-0244-03	C3ABPJ000072
IC621	658-0240-36	C3FBMG000017
IC631	658-0240-37	C0JBAH000082
IC641	658-0240-37	C0JBAH000082
IC651	658-0240-38	C3GBCC000001
IC652	658-0240-39	C0JBAB000255
IC721	658-0245-02	C0FBBK000048
L101	658-0240-30	J0JCC0000152
L102	658-0240-30	J0JCC0000152
L201	658-0240-30	J0JCC0000152
L401	658-0240-32	YELTBMHS800T
L403	658-0240-32	YELTBMHS800T
L404	658-0240-32	YELTBMHS800T
L406	658-0240-32	YELTBMHS800T
L511	658-0240-52	J0JCC0000042
L512	658-0240-56	J0MAB0000134
L513	658-0240-30	J0JCC0000152
L514	658-0240-30	J0JCC0000152
L515	658-0240-30	J0JCC0000152
L516	658-0240-30	J0JCC0000152
L541	658-0240-30	J0JCC0000152
L701	658-0240-46	470PF 50WV
L702	658-0240-46	470PF 50WV
L703	658-0240-57	J0MAB0000015
L704	658-0240-57	J0MAB0000015
L705	658-0240-54	G1C2R2K00001
L721	658-0240-53	YELTBLM2A102
L722	658-0240-53	YELTBLM2A102
L723	658-0240-53	YELTBLM2A102
L724	658-0240-53	YELTBLM2A102
Q151	658-0237-14	TR 2SB766ATX
Q152	658-0237-14	TR 2SB766ATX
Q153	658-0240-10	B1GDCFNN0007
Q154	658-0240-11	B1GBCFNN0009
Q251	658-0244-04	Transistor B3HB00000023
Q252	658-0244-04	Transistor B3HB00000023
Q253	658-0244-04	Transistor B3HB00000023
Q301	658-0237-18	TR B1GBGEEA0001
Q321	658-0244-05	Transistor B1GBGFGG0001
R101	033-1231-15	1/16W 12k ohm
R102	033-1231-15	1/16W 12k ohm
R103	658-0237-41	1/16W 24k ohm
R104	658-0237-42	1/16W 3.9k ohm Metal
R106	658-0237-43	1/16W 18k ohm Metal
R107	033-4721-15	1/16W 4.7k ohm
R110	033-2021-15	1/16W 2k ohm
R121	033-1221-15	1/16W 1.2k ohm
R131	033-1051-15	1/16W 1M ohm
R132	033-1051-15	1/16W 1M ohm
R141	033-1031-15	1/16W 10k ohm
R142	033-1031-15	1/16W 10k ohm
R151	033-2291-15	1/16W 2.2 ohm
R152	658-0237-40	1/2W 20 ohm
R153	033-2291-15	1/16W 2.2 ohm
R154	658-0237-40	1/2W 20 ohm
R155	033-1021-15	1/16W 1k ohm
R156	033-3331-15	1/16W 33k ohm
R157	033-2231-15	1/16W 22k ohm
R201	033-4711-15	1/16W 470 ohm

REF No.	PART No.	DESCRIPTION
R202	033-1031-15	1/16W 10k ohm
R203	033-1031-15	1/16W 10k ohm
R212	658-0240-18	150 ohm 1/16W
R214	033-4721-15	1/16W 4.7k ohm
R215	033-4721-15	1/16W 4.7k ohm
R216	033-2731-15	1/16W 27k ohm
R217	033-2731-15	1/16W 27k ohm
R218	033-1031-15	1/16W 10k ohm
R219	033-3321-15	1/16W 3.3k ohm
R220	033-3321-15	1/16W 3.3k ohm
R221	033-1051-15	1/16W 1M ohm
R222	033-4711-15	1/16W 470 ohm
R223	033-3931-15	1/16W 39k ohm
R227	033-0000-05	1/16W 0 ohm
R231	033-1021-15	1/16W 1k ohm
R232	033-1531-15	1/16W 15k ohm
R234	033-1051-15	1/16W 1M ohm
R235	033-5621-15	1/16W 5.6k ohm
R236	033-5621-15	1/16W 5.6k ohm
R251	033-1031-15	1/16W 10k ohm
R252	033-4731-15	1/16W 47k ohm
R253	033-1531-15	1/16W 15k ohm
R254	033-1531-15	1/16W 15k ohm
R255	033-1531-15	1/16W 15k ohm
R261	658-0237-56	Resistor Network
R262	658-0244-14	NetworkResistor
R263	658-0244-09	Chip,1/16W27 ohm
R264	033-2201-15	1/16W 22 ohm
R265	033-2201-15	1/16W 22 ohm
R266	033-0000-05	1/16W 0 ohm
R267	033-1031-15	1/16W 10k ohm
R268	033-1021-15	1/16W 1k ohm
R269	033-1031-15	1/16W 10k ohm
R270	033-3931-15	1/16W 39k ohm
R271	658-0237-56	Resistor Network
R272	658-0237-58	Resistor Network
R273	658-0237-58	Resistor Network
R274	658-0244-14	NetworkResistor
R275	033-2201-15	1/16W 22 ohm
R276	033-2201-15	1/16W 22 ohm
R277	033-2201-15	1/16W 22 ohm
R278	033-2201-15	1/16W 22 ohm
R279	033-2201-15	1/16W 22 ohm
R280	033-2201-15	1/16W 22 ohm
R281	033-2201-15	1/16W 22 ohm
R282	033-2201-15	1/16W 22 ohm
R283	033-2201-15	1/16W 22 ohm
R284	033-2201-15	1/16W 22 ohm
R285	033-2201-15	1/16W 22 ohm
R286	033-2201-15	1/16W 22 ohm
R287	033-2201-15	1/16W 22 ohm
R288	033-2201-15	1/16W 22 ohm
R289	033-2201-15	1/16W 22 ohm
R290	033-2201-15	1/16W 22 ohm
R291	033-3931-15	1/16W 39k ohm
R292	033-3931-15	1/16W 39k ohm
R293	033-3931-15	1/16W 39k ohm
R294	033-3931-15	1/16W 39k ohm
R295	033-3931-15	1/16W 39k ohm
R296	033-3931-15	1/16W 39k ohm
R297	033-3931-15	1/16W 39k ohm
R298	033-3931-15	1/16W 39k ohm
R301	033-1811-15	1/16W 180 ohm
R302	033-1811-15	1/16W 180 ohm
R303	033-1811-15	1/16W 180 ohm
R311	033-4731-15	1/16W 47k ohm
R312	033-1811-15	1/16W 180 ohm

REF No.	PART No.	DESCRIPTION
R313	033-6821-15	1/16W 6.8k ohm
R314	033-5621-15	1/16W 5.6k ohm
R315	033-5621-15	1/16W 5.6k ohm
R316	033-1031-15	1/16W 10k ohm
R317	033-5621-15	1/16W 5.6k ohm
R321	033-4721-15	1/16W 4.7k ohm
R322	033-4731-15	1/16W 47k ohm
R323	658-0244-10	Chip,1/8W0.51 ohm
R324	033-1011-15	1/16W 100 ohm
R325	033-1011-15	1/16W 100 ohm
R327	117-0000-10	0Ω
R431	658-0240-23	100k ohm 1/16W
R441	033-4731-15	1/16W 47k ohm
R501	033-1011-15	1/16W 100 ohm
R511	658-0240-47	33 ohm 1/16W
R512	033-1011-15	1/16W 100 ohm
R513	033-1011-15	1/16W 100 ohm
R514	658-0240-18	150 ohm 1/16W
R515	033-3931-15	1/16W 39k ohm
R516	033-4731-15	1/16W 47k ohm
R517	033-4731-15	1/16W 47k ohm
R518	033-2201-15	1/16W 22 ohm
R519	033-2201-15	1/16W 22 ohm
R521	033-1011-15	1/16W 100 ohm
R522	658-0240-47	33 ohm 1/16W
R523	116-1001-10	1/8W 10 ohm
R524	658-0240-47	33 ohm 1/16W
R525	658-0240-47	33 ohm 1/16W
R526	658-0240-18	150 ohm 1/16W
R527	658-0244-11	Chip,1/16W1k ohm
R528	658-0240-48	75 ohm 1/10W
R541	033-3321-15	1/16W 3.3k ohm
R543	033-4711-15	1/16W 470 ohm
R552	033-1031-15	1/16W 10k ohm
R553	033-1031-15	1/16W 10k ohm
R554	033-2021-15	1/16W 2k ohm
R555	033-3931-15	1/16W 39k ohm
R556	033-3931-15	1/16W 39k ohm
R557	033-3931-15	1/16W 39k ohm
R570	033-4711-15	1/16W 470 ohm
R571	033-4711-15	1/16W 470 ohm
R572	033-4711-15	1/16W 470 ohm
R573	033-4711-15	1/16W 470 ohm
R574	033-4711-15	1/16W 470 ohm
R575	033-4711-15	1/16W 470 ohm
R576	033-4711-15	1/16W 470 ohm
R577	033-4711-15	1/16W 470 ohm
R621	658-0240-18	150 ohm 1/16W
R623	033-1031-15	1/16W 10k ohm
R631	658-0240-50	75 ohm 1/16W
R651	033-2021-15	1/16W 2k ohm
R701	033-1011-15	1/16W 100 ohm
R702	033-1011-15	1/16W 100 ohm
R703	033-1011-15	1/16W 100 ohm
R704	033-0000-05	1/16W 0 ohm
R705	033-0000-05	1/16W 0 ohm
R706	033-0000-05	1/16W 0 ohm
R707	033-1011-15	1/16W 100 ohm
R708	033-1011-15	1/16W 100 ohm
R709	033-2211-15	1/16W 220 ohm
R711	118-0000-10	0Ω
R712	118-0000-10	0Ω
R713	033-2211-15	1/16W 220 ohm
R714	033-2211-15	1/16W 220 ohm
R715	033-2211-15	1/16W 220 ohm
R716	033-2211-15	1/16W 220 ohm
R717	033-1011-15	1/16W 100 ohm