2. EXPLODED VIEWS AND PARTS LIST

2.1 PACKING

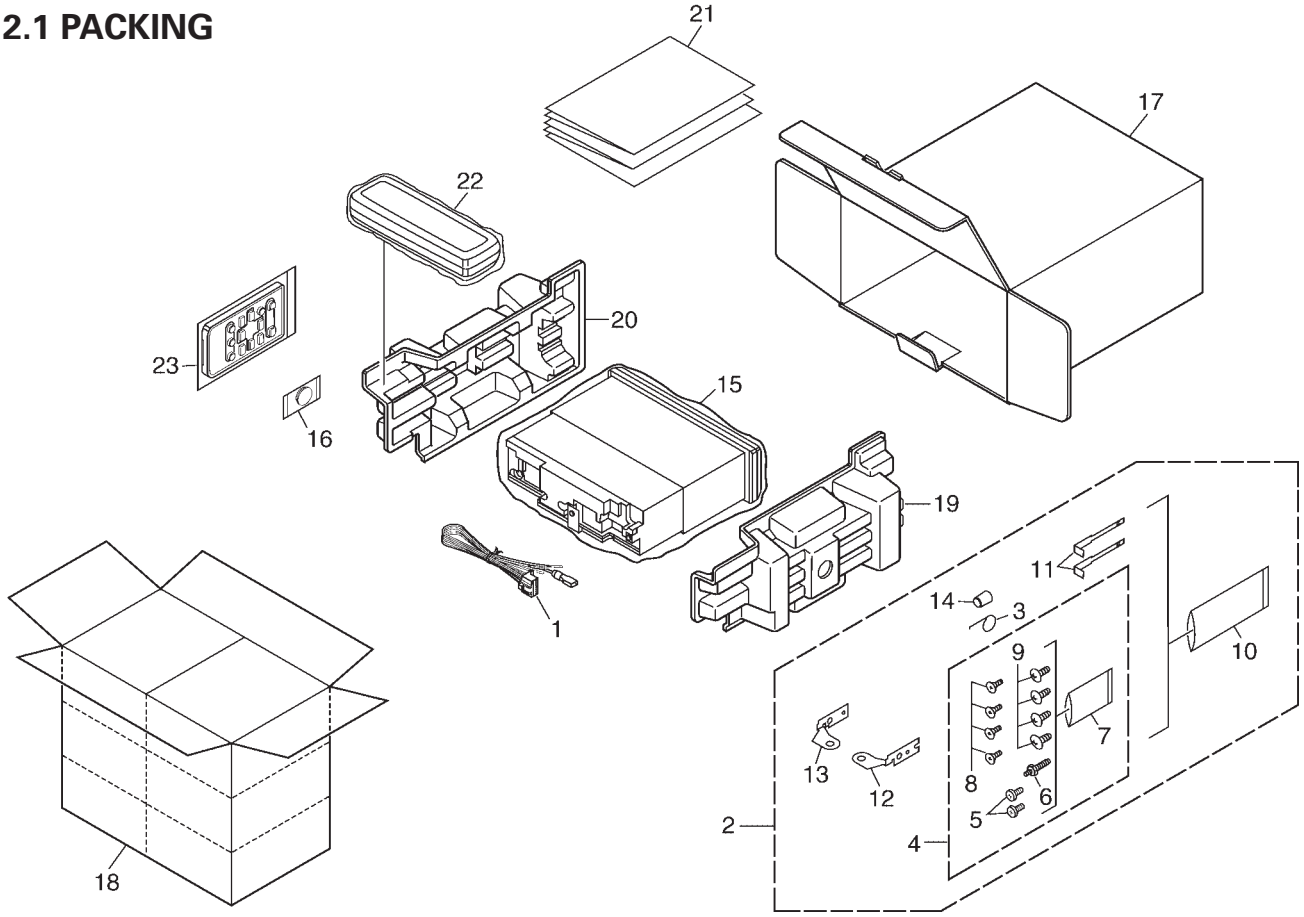

NOTE:

- Parts marked by "*" are generally unavailable because they are not in our Master Spare Parts List.
- Screws adjacent to ∇ mark on the product are used for disassembly.
- For the applying amount of lubricants or glue, follow the instructions in this manual.
  (In the case of no amount instructions, apply as you think it appropriate.)

(1) PACKING SECTION PARTS LIST

Mark	No.	Description	Part No.
	1	Cord Assy	CDE7060
	2	Accessory Assy	CEA3376
	3	Spring	CBH1650
	4	Screw Assy	CEA3445
	5	Fixing Screw	BPZ20P060FZK
	6	Screw	CBA1002
*	7	Polyethylene Bag	CEG-127
	8	Screw	CRZ50P090FTC
	9	Screw	TRZ50P080FTC
*	10	Polyethylene Bag	CEG-158
	11	Handle	CNC5395
	12	Holder	CND1249
	13	Holder	CND1250
	14	Bush	CNV3930
	15	Polyethylene Bag	CEG1173
*	16	Battery	CEX1065
	17	Carton	See Contrast table(2)
	18	Contain Box	See Contrast table(2)
	19	Protector	CHP2663
	20	Protector	CHP2664
	21-1	Owner's Manual	See Contrast table(2)
	21-2	Installation Manual	See Contrast table(2)
*	21-3	Warranty Card	See Contrast table(2)
*	21-4	Card	See Contrast table(2)
*	21-5	Caution Card	See Contrast table(2)
	22	Case Assy	See Contrast table(2)
	23	Remote Control Unit	CXC1265

(2) CONTRAST TABLE

DEH-P250/XM/UC, DEH-P250/XN/UC, DEH-P2500/XM/UC, DEH-P2500/XN/UC, DEH-P25/XM/UC and DEH-P25/XN/UC are constructed the same except for the following:

Mark No.	Symbol and Description	Part No.		
		DEH-P250/XM/UC	DEH-P2500/XM/UC	DEH-P25/XM/UC
17	Carton	CHG4958	CHG4959	CHG4960
18	Contain Box	CHL4958	CHL4959	CHL4960
21-1	Owner's Manual	CRD3686	CRD3688	CRD3688
21-2	Installation Manual	CRD3687	CRD3689	CRD3689
* 21-3	Warranty Card	CRY1070	Not used	Not used
* 21-4	Card	Not used	ARY1048	ARY1048
* 21-5	Caution Card	Not used	Not used	CRP1294
22	Case Assy	CXB3520	Not used	Not used

Mark No.	Symbol and Description	Part No.		
		DEH-P250/XN/UC	DEH-P2500/XN/UC	DEH-P25/XN/UC
17	Carton	CHG4972	CHG4973	CHG4974
18	Contain Box	CHL4972	CHL4973	CHL4974
21-1	Owner's Manual	CRD3686	CRD3688	CRD3688
21-2	Installation Manual	CRD3687	CRD3689	CRD3689
* 21-3	Warranty Card	CRY1070	Not used	Not used
* 21-4	Card	Not used	ARY1048	ARY1048
* 21-5	Caution Card	Not used	Not used	CRP1294
22	Case Assy	CXB3520	Not used	Not used

● Owner's Manual, Installation Manual

Model	Part No.	Language
DEH-P250/XM/UC	CRD3686	English, French, Spanish
DEH-P250/XN/UC	CRD3687	
DEH-P2500/XM/UC DEH-P2500/XN/UC	CRD3688	English, French, Spanish
DEH-P25/XM/UC DEH-P25/XN/UC	CRD3689	

2.2 EXTERIOR

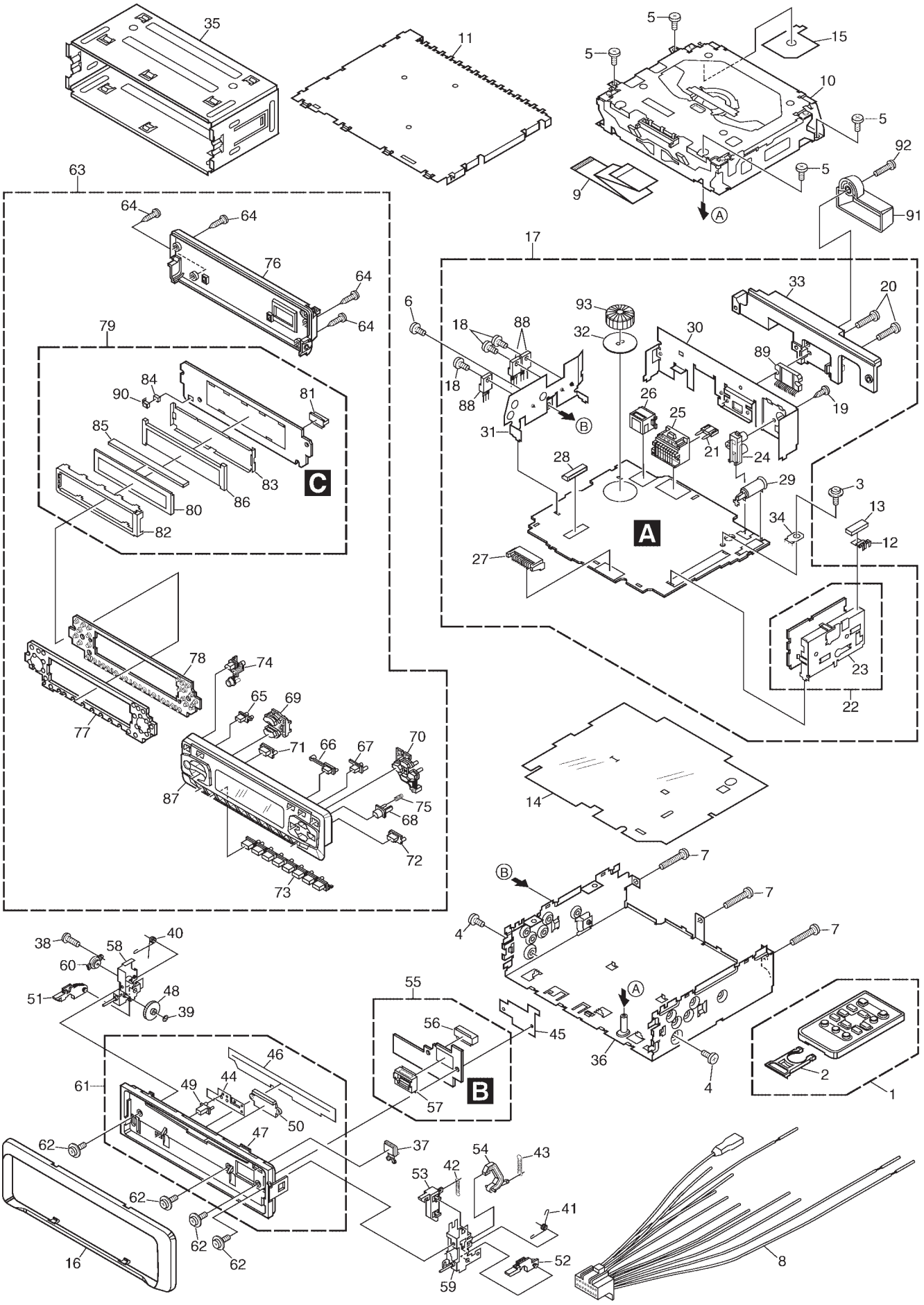

35
11
5
15
10
92
9
91
63
64
76
79
84
90
81
85
83
86
80
82
C
17
6
18
88
93
32
30
33
20
89
19
26
25
21
24
31
28
29
3
13
34
12
A
27
23
22
78
74
65
69
77
71
66
67
70
87
75
68
72
73
14
7
4
38
58
40
60
51
48
39
55
56
45
36
2
1
61
49
44
46
50
47
57
B
62
37
54
43
53
42
41
16
59
52
8

(1) EXTERIOR SECTION PARTS LIST

Mark No.	Description	Part No.
1	Remote Control Unit	CXC1265
2	Cover	CNS7068
3	Screw	ISS26P055FTC
4	Screw	BMZ30P040FZK
5	Screw	BSZ26P060FTC
6	Screw	BSZ30P060FTC
7	Screw	BSZ30P200FTC
8	Cord Assy	CDE7060
9	Cable	CDE7188
10	CD Mechanism Module(S10)	CXK5600
11	Case	CNB2793
12	Earth Plate	CNC8915
13	Cushion	CNM4870
14	Insulator	CNM7935
15	Insulator	CNM8174
16	Panel	See Contrast table(2)
17	Tuner Amp Unit	CWM8618
18	Screw	ASZ26P060FTC
19	Screw	BPZ26P080FTC
20	Screw	BSZ26P160FTC
21	Fuse(10A)	CEK1208
22	FM/AM Tuner Unit	CWE1646
23	Holder	CND1054
24	Pin Jack(CN351)	CKB1059
25	Plug(CN981)	CKM1376
26	Connector(CN101)	CKS3408
27	Plug(CN831)	CKS3537
28	Connector(CN721)	CKS3835
29	Antenna Jack(CN401)	CKX1056
30	Holder	CND1237
31	Holder	CND1352
32	Insulator	CNM8245
33	Heat Sink	CNR1668
34	Terminal(CN402)	VNF1084
35	Holder Unit	See Contrast table(2)
36	Chassis Unit	CXB9528
37	Button(EJECT)	CAC7752
38	Screw(M2x2)	CBA1176
39	Washer	CBF1038
40	Spring	CBH2650
41	Spring	CBH2651
42	Spring	CBH2652
43	Spring	CBH2653
44	Spring	CBL1512
45	Holder	CND1254

Mark No.	Description	Part No.
46	Cover	CNM6854
47	Panel	CNS7245
48	Gear	CNV5997
49	Pin	CNV6486
50	Lighting Conductor	CNV6487
51	Arm	CNV7400
52	Arm	CNV7401
53	Arm	CNV7402
54	Arm	CNV7403
55	Panel Unit	CWM8758
56	Socket(CN1950)	CKS3550
57	Connector(CN1951)	CKS4462
58	Holder Unit	CXB9501
59	Holder Unit	CXB9502
60	Damper Unit	CXB9503
61	Service Panel Unit	CXX1691
62	Screw	IMS20P045FZK
63	Detach Grille Assy	See Contrast table(2)
64	Screw	BPZ20P100FZK
65	Button(DISP)	CAC7779
66	Button(PAUSE)	CAC7780
67	Button(AUDIO)	CAC7781
68	Button(OPEN)	CAC7782
69	Button(VOLUME)	CAC7783
70	Button(SELECT)	CAC7784
71	Button(SRC)	CAC7785
72	Button(FUNC)	CAC7786
73	Button(1-6)	CAC7787
74	Button(CLK, EQ)	CAC7808
75	Spring	CBH2630
76	Cover	CNS7269
77	Lighting Conductor	CNV7421
78	Rubber	CNV7422
79	Keyboard Unit	See Contrast table(2)
80	LCD(LCD1901)	See Contrast table(2)
81	Connector(CN1901)	CKS4524
82	Holder	CNC9757
83	Sheet	CNM7647
84	Cushion	CNM8092
85	Connector	CNV6440
86	Lighting Conductor	CNV7495
87	Grille Unit	See Contrast table(2)
88	Transistor(Q752, 901, 911)	2SD2375
89	IC(IC301)	PAL007A
90	IC(IC1902)	TSOP4840SB1
91	Holder	See Contrast table(2)
92	Screw	See Contrast table(2)
93	Choke Coil(L981)	CTH1280

(2) CONTRAST TABLE

DEH-P250/XM/UC, DEH-P250/XN/UC, DEH-P2500/XM/UC, DEH-P2500/XN/UC, DEH-P25/XM/UC and DEH-P25/XN/UC are constructed the same except for the following:

Mark No.	Symbol and Description	Part No.		
		DEH-P250/XM/UC	DEH-P2500/XM/UC	DEH-P25/XM/UC
16	Panel	CNS6935	CNS7309	CNS7309
35	Holder Unit	CXB6681	CXB6681	CXB6681
63	Detach Grille Assy	CXB9601	CXB9602	CXB9603
79	Keyboard Unit	CWM8635	CWM8635	CWM8636
80	LCD(LCD1901)	CAW1759	CAW1759	CAW1760
87	Grille Unit	CXB9629	CXB9630	CXB9631
91	Holder	Not used	Not used	CNV7619
92	Screw	Not used	Not used	BMZ40P140FTC

Mark No.	Symbol and Description	Part No.		
		DEH-P250/XN/UC	DEH-P2500/XN/UC	DEH-P25/XN/UC
16	Panel	CNS6935	CNS7309	CNS7309
35	Holder	CNC8659	CNC8659	CNC8659
63	Detach Grille Assy	CXB9601	CXB9602	CXB9603
79	Keyboard Unit	CWM8635	CWM8635	CWM8636
80	LCD(LCD1901)	CAW1759	CAW1759	CAW1760
87	Grille Unit	CXB9629	CXB9630	CXB9631
91	Holder	Not used	Not used	CNV7619
92	Screw	Not used	Not used	BMZ40P140FTC

2.3 CD MECHANISM MODULE

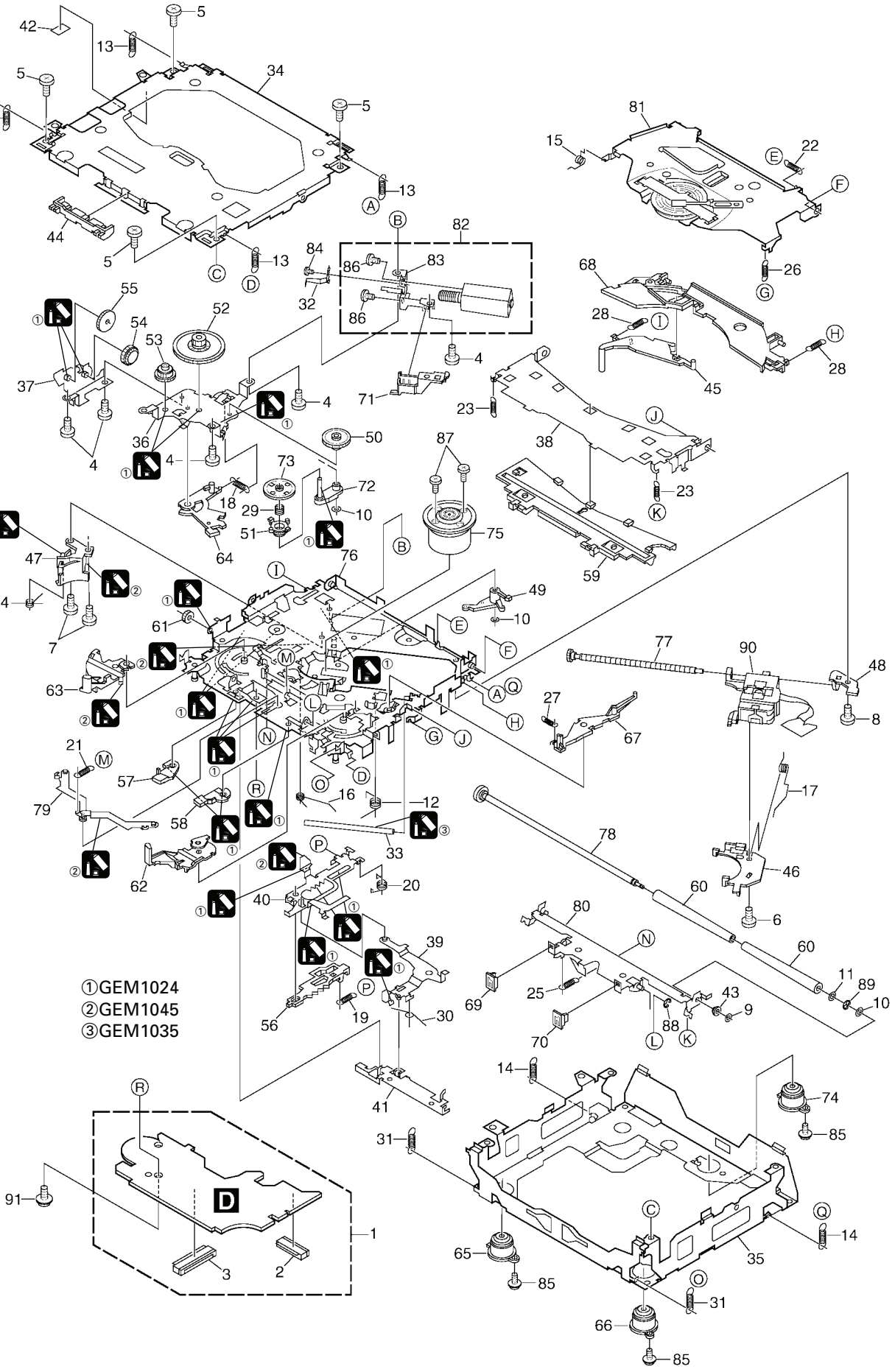

● CD MECHANISM MODULE SECTION PARTS LIST

Mark	No.	Description	Part No.
	1	CD Core Unit(S10)	CWX2708
	2	Connector(CN101)	CKS4182
	3	Connector(CN701)	CKS4188
	4	Screw	BMZ20P035FTC
	5	Screw	BSZ20P040FTC
	6	Screw(M2x4)	CBA1362
	7	Screw(M2x3)	CBA1511
	8	Screw(M2x3)	CBA1527
	9	Washer	CBF1037
	10	Washer	CBF1038
	11	Washer	CBF1060
	12	Spring	CBH2390
	13	Spring	CBH2606
	14	Spring	CBH2607
	15	Spring	CBH2608
	16	Spring	CBH2609
	17	Spring	CBH2610
	18	Spring	CBH2611
	19	Spring	CBH2612
	20	Spring	CBH2613
	21	Spring	CBH2614
	22	Spring	CBH2615
	23	Spring	CBH2616
	24	Spring	CBH2617
	25	Spring	CBH2620
	26	Spring	CBH2621
	27	Spring	CBH2641
	28	Spring	CBH2642
	29	Spring	CBH2643
	30	Spring	CBH2659
	31	Spring	CBH2688
*	32	Spring	CBL1614
	33	Shaft	CLA3845
	34	Frame	CNC9962
	35	Frame	CNC9963
	36	Bracket	CNC9966
	37	Bracket	CNC9967
	38	Arm	CNC9968
	39	Arm	CNC9973
	40	Lever	CNC9983
	41	Lever	CNC9984
	42	Sheet	CNM8134
	43	Collar	CNV6906
	44	Guide	CNV6925
	45	Arm	CNV7198

Mark	No.	Description	Part No.
	46	Rack	CNV7199
	47	Holder	CNV7201
	48	Holder	CNV7202
	49	Arm	CNV7203
	50	Gear	CNV7207
	51	Gear	CNV7208
	52	Gear	CNV7209
	53	Gear	CNV7210
	54	Gear	CNV7211
	55	Gear	CNV7212
	56	Rack	CNV7214
	57	Arm	CNV7215
	58	Arm	CNV7216
	59	Guide	CNV7217
	60	Roller	CNV7218
	61	Gear	CNV7219
	62	Arm	CNV7221
	63	Arm	CNV7220
	64	Arm	CNV7222
	65	Damper	CNV7313
	66	Damper	CNV7314
	67	Arm	CNV7341
	68	Arm	CNV7342
	69	Guide	CNV7360
	70	Guide	CNV7361
	71	Holder	CNV7437
	72	Arm	CNV7444
	73	Gear	CNV7595
	74	Damper	CNV7618
	75	Motor Unit(M1)	CXB6007
	76	Chassis Unit	CXB8728
	77	Screw Unit	CXB8729
	78	Gear Unit	CXB8731
	79	Arm Unit	CXB8732
	80	Arm Unit	CXB8735
	81	Arm Unit	CXB8852
	82	Motor Unit(M2)	CXB8933
	83	Bracket	CNC9985
	84	Screw	JFZ20P020FTC
	85	Screw(M2x5)	EBA1028
	86	Screw	JFZ20P020FTC
	87	Screw	JGZ17P022FTC
	88	Washer	YE15FTC
	89	Washer	YE20FTC
	90	Pickup Unit(Service)(P10)	CXX1641
	91	Screw	IMS26P030FMC

5. ELECTRICAL PARTS LIST

NOTES:

- Parts whose parts numbers are omitted are subject to being not supplied.
- The part numbers shown below indicate chip components.

Chip Resistor

RS1/○S○○○J,RS1/○○S○○○J

Chip Capacitor (except for CQS.....)

CKS....., CCS....., CSZS.....

A Unit Number : CWM8618
Unit Name : Tuner Amp Unit

MISCELLANEOUS

=====Circuit Symbol and No.		===Part Name	Part No.
IC	101	IC	HA12187FP
IC	131	IC	PML003AM
IC	301	IC	PAL007A
IC	601	IC	PE5341C
IC	651	IC	BD4834G
IC	722	IC	TC7SET08FU
IC	921	IC	BA033FP
Q	101	Transistor	2SA1037K
Q	102	Transistor	DTC124EK
Q	301	Transistor	DTC124EK
Q	351	Transistor	IMH3A
Q	501	Transistor	2SC2412K
Q	502	Transistor	IMD2A
Q	601	Transistor	DTA114EK
Q	751	Transistor	IMD2A
Q	752	Transistor	2SD2375
Q	831	Transistor	DTC143EK
Q	901	Transistor	2SD2375
Q	902	Transistor	IMD2A
Q	911	Transistor	2SD2375
Q	912	Transistor	2SB1238
Q	913	Transistor	DTC114EK
Q	931	Transistor	IMX1
Q	961	Transistor	2SB1238
Q	962	Transistor	DTC114EK
Q	971	Transistor	2SA1036K
D	501	Diode	DAN202U
D	502	Diode	HZS9L(A2)
D	571	Diode	MPG06G-6415G50
D	572	Diode	MPG06G-6415G50
D	751	Diode	HZS9L(B1)
D	831	Diode	DAN202U
D	832	Diode	DAN202U
D	833	Diode	DAP202U
D	834	Diode	DAP202U
D	901	Diode	HZS6L(B1)
D	902	Diode	MPG06G-6415G50
D	911	Diode	HZS9L(B3)
D	921	Diode	1SR154-400
D	922	Diode	1SR154-400
D	923	Diode	1SR154-400
D	931	Diode	HZS7L(C3)
D	932	Diode	HZS7L(A1)
D	981	Diode	MPG06G-6415G50
D	982	Diode	MPG06G-6415G50
ZNR	401	Arrester	DSP-201M
L	131	Inductor	LCTA2R2J2520
L	401	Ferri-Inductor	LAU4R7K
L	402	Inductor	LAU1R0K
L	404	Inductor	LAU1R0K

=====Circuit Symbol and No.		===Part Name	Part No.
L	405	Inductor	LAU2R2K
L	601	Inductor	LAU2R2K
L	971	Inductor	LAU2R2K
L	981	Choke Coil 600µH	CTH1280
X	601	Radiator 12.58291MHz	CSS1402
S	831	Switch(DETACH SENSE)	CSN1039
SP	601	Buzzer	CPV1062
		Fuse 10A	CEK1208
		FM/AM Tuner Unit	CWE1646

RESISTORS

R	101		RS1/16S150J
R	102		RS1/16S470J
R	103		RS1/16S101J
R	104		RS1/16S101J
R	105		RS1/16S181J
R	106		RS1/16S181J
R	107		RS1/16S223J
R	108		RS1/16S223J
R	109		RS1/16S102J
R	110		RS1/16S102J
R	111		RS1/16S222J
R	112		RS1/16S103J
R	113		RS1/16S332J
R	114		RS1/16S562J
R	131		RS1/16S0R0J
R	132		RS1/16S0R0J
R	133		RAB4C102J
R	137		RS1/16S101J
R	138		RS1/16S101J
R	139		RS1/16S101J
R	140		RS1/16S101J
R	141		RS1/16S0R0J
R	142		RS1/16S0R0J
R	301		RS1/16S153J
R	302		RS1/16S103J
R	303		RS1/16S103J
R	304		RS1/16S331J
R	351		RS1/16S821J
R	352		RS1/16S821J
R	359		RS1/16S223J
R	360		RS1/16S223J
R	401		RS1/16S681J
R	403		RS1/16S122J
R	404		RS1/16S681J
R	405		RS1/16S681J
R	406		RS1/16S681J
R	501		RS1/16S103J
R	502		RS1/16S473J
R	504		RS1/16S102J
R	601		RS1/16S102J
R	603		RS1/16S473J
R	605		RS1/16S102J
R	606		RS1/16S473J
R	607		RS1/16S104J
R	618		RS1/16S104J

=====Circuit Symbol and No.	===Part Name	Part No.
R 619		RS1/16S1602D
R 620		RS1/16S473J
R 621		RS1/16S473J
R 622		RS1/16S473J
R 623		RS1/16S473J
R 624		RS1/16S473J
R 625		RS1/16S473J
R 626		RS1/16S681J
R 627		RS1/16S681J
R 628		RS1/16S681J
R 640		RS1/16S0R0J
R 651		RS1/16S102J
R 652		RS1/16S183J
R 713		RS1/16S104J
R 716		RS1/16S221J
R 724		RS1/16S104J
R 727		RS1/16S0R0J
R 728		RS1/16S0R0J
R 729		RS1/16S221J
R 730		RS1/16S221J
R 731		RS1/16S221J
R 732		RS1/16S221J
R 733		RS1/16S102J
R 735		RS1/16S221J
R 736		RS1/16S221J
R 737		RS1/16S221J
R 740		RS1/16S102J
R 741		RS1/16S221J
R 742		RS1/16S221J
R 749		RS1/16S0R0J
R 751		RD1/4PU821J
R 752		RD1/4PU221J
R 753		RS1/16S222J
R 754		RS1/16S472J
R 757		RD1/4PU0R0J
R 831		RS1/16S222J
R 832		RS1/16S222J
R 833		RS1/16S222J
R 834		RS1/16S222J
R 835		RS1/16S473J
R 836		RS1/16S473J
R 837		RD1/4PU391J
R 838		RS1/16S102J
R 839		RS1/16S102J
R 840		RS1/16S102J
R 841		RS1/16S102J
R 845		RS1/16S102J
R 901		RD1/4PU221J
R 902		RS1/16S223J
R 903		RS1/16S821J
R 904		RS1/16S821J
R 905		RS1/16S0R0J
R 911		RS1/16S223J
R 914		RS1/16S152J
R 915		RD1/4PU152J
R 916		RS1/16S223J
R 921		RD1/4PU1R8J
R 931		RS1/16S104J
R 932		RS1/16S473J
R 933		RS1/16S103J
R 934		RS1/16S473J
R 935		RS1/16S472J
R 961		RS1/16S223J
R 962		RS1/16S182J
R 963		RD1/4PU1R0J

=====Circuit Symbol and No.	===Part Name	Part No.
R 965		RS1/16S182J
R 971		RS1/16S153J
R 972		RS1/16S153J
R 973		RS1/16S222J
R 981		RD1/4PU102J
R 4721		RD1/4PU0R0J
R 9101		RD1/4PU0R0J
R 9403		RD1/4PU0R0J

CAPACITORS

C 101			CKSRYB104K25
C 131			CEJQ1R0M50
C 132			CEJQ1R0M50
C 133			CKSRYB104K25
C 134			CKSRYB104K25
C 135			CEJQ1R0M50
C 136			CEJQ1R0M50
C 137			CEJQ1R0M50
C 138			CEJQ1R0M50
C 139			CEJQ470M16
C 140			CKSRYB104K25
C 143			CEJQ100M16
C 145			CKSRYB105K10
C 146			CKSRYB105K10
C 147			CKSRYB153K50
C 148			CKSRYB153K50
C 301			CKSRYB474K10
C 302			CKSRYB474K10
C 303			CKSRYB474K10
C 304			CKSRYB474K10
C 305			CKSRYB474K10
C 306			CKSRYB474K10
C 307			CKSRYB474K10
C 308			CKSRYB474K10
C 309			CEHAR330M10
C 310		3300µF/16V	CCH1486
C 311			CKSRYB104K25
C 312			CEHAR100M16
C 313			CKSQYB225K10
C 314			CKSQYB225K10
C 351			CEJQ100M16
C 352			CEJQ100M16
C 401			CKSRYB103K50
C 402			CEJQ470M6R3
C 403			CKSRYB103K50
C 404			CKSRYB103K50
C 405			CEJQ101M16
C 407			CKSYB475K10
C 602			CKSRYB105K10
C 603			CCSRCH200J50
C 604			CCSRCH200J50
C 605			CEJQ4R7M35
C 606			CKSRYB104K25
C 608			CCSRCH101J50
C 609			CCSRCH470J50
C 611			CKSRYB104K25
C 652			CKSRYB105K10
C 729			CKSRYB473K50
C 751			CKSRYB224K10
C 752			CKSRYB102K50
C 753			CEJQ101M16
C 901			CEJQ470M10
C 902			CKSRYB103K50
C 903			CKSRYB472K50
C 904		470µF/16V	CCH1331

Circuit Symbol and No.	Part Name	Part No.
C 911		CEJQ221M10
C 912		CKSRYB103K50
C 913		CEJQ101M16
C 921		CEJQ220M10
C 922		CKSRYB103K50
C 923		CKSYB475K10
C 931		CKSRYB104K25
C 961		CKSRYB473K50

C Unit Number : CWM8635(DEH-P250/XM/UC, DEH-P250/XN/UC, DEH-P2500/XM/UC, DEH-P2500/XN/UC)
Unit Name : Keyboard Unit

MISCELLANEOUS

IC	1901	IC	PD6340A
IC	1902	IC	TSOP4840SB1
D	1801	LED	NSSW440-9159
D	1802	LED	NSSW440-9159
D	1803	LED	SML-310PT
D	1804	LED	SML-310PT
D	1805	LED	SML-310PT
D	1806	LED	SML-310PT
D	1807	LED	SML-310PT
D	1808	LED	SML-310PT
D	1809	LED	SML-310PT
D	1810	LED	SML-310PT
D	1811	LED	SML-310PT
D	1812	LED	SML-310PT
D	1813	LED	SML-310PT
D	1814	LED	SML-310PT
D	1901	Diode	DAN202U
D	1902	Diode	DAP202U
X	1901	Ceramic Resonator 4.97MHz	CSS1422
IL	1801	Lamp 14V 40mA	CEL1651
IL	1802	Lamp 14V 40mA	CEL1651
LCD	1901	LCD	CAW1759

RESISTORS

R	1801		RS1/16S151J
R	1802		RS1/16S151J
R	1803		RS1/16S151J
R	1804		RS1/16S181J
R	1805		RS1/16S151J
R	1806		RS1/16S181J
R	1807		RS1/16S181J
R	1808		RS1/16S151J
R	1809		RS1/16S181J
R	1810		RS1/16S181J
R	1811		RS1/16S151J
R	1812		RS1/16S181J
R	1813		RS1/16S181J
R	1814		RS1/16S151J
R	1815		RS1/16S181J
R	1901		RS1/16S121J
R	1902		RS1/16S2R2J
R	1904		RS1/16S222J
R	1905		RS1/16S222J
R	1906		RS1/16S473J

CAPACITORS

C	1801		CKSRYB104K16
C	1802		CKSRYB104K16
C	1901		CKSRYB224K10
C	1902		CSZS4R7M16

C Unit Number : CWM8636(DEH-P25/XM/UC, DEH-P25/XN/UC)
Unit Name : Keyboard Unit

MISCELLANEOUS

IC	1901	IC	PD6340A
IC	1902	IC	TSOP4840SB1
D	1801	LED	NSSW440-9159
D	1802	LED	NSSW440-9159
D	1803	LED	SML-310VT
D	1804	LED	SML-310VT
D	1805	LED	SML-310VT
D	1806	LED	SML-310VT
D	1807	LED	SML-310VT
D	1808	LED	SML-310VT
D	1809	LED	SML-310VT
D	1810	LED	SML-310VT
D	1811	LED	SML-310VT
D	1812	LED	SML-310VT
D	1813	LED	SML-310VT
D	1814	LED	SML-310VT
D	1901	Diode	DAN202U
D	1902	Diode	DAP202U
X	1901	Ceramic Resonator 4.97MHz	CSS1422
IL	1801	Lamp 14V 40mA	CEL1662
IL	1802	Lamp 14V 40mA	CEL1662
LCD	1901	LCD	CAW1760

RESISTORS

R	1801		RS1/16S151J
R	1802		RS1/16S151J
R	1803		RS1/16S151J
R	1804		RS1/16S181J
R	1805		RS1/16S181J
R	1806		RS1/16S181J
R	1807		RS1/16S181J
R	1808		RS1/16S181J
R	1809		RS1/16S181J
R	1810		RS1/16S181J
R	1811		RS1/16S181J
R	1812		RS1/16S181J
R	1813		RS1/16S181J
R	1814		RS1/16S181J
R	1815		RS1/16S181J
R	1901		RS1/16S121J
R	1902		RS1/16S2R2J
R	1904		RS1/16S222J
R	1905		RS1/16S222J
R	1906		RS1/16S473J

CAPACITORS

C	1801		CKSRYB104K16
C	1802		CKSRYB104K16
C	1901		CKSRYB224K10
C	1902		CSZS4R7M16

B Unit Number : CWM8758
Unit Name : Panel Unit

MISCELLANEOUS

D	1970	LED	CL220PGC
S	1970	Push Switch(EJECT)	CSG1112

=====Circuit Symbol and No.	===Part Name	Part No.
RESISTORS		
R 1970		RS1/16S101J
R 1971		RS1/16S101J
R 1972		RS1/16S0R0J
CAPACITORS		
C 1970		CKSRYB104K16

D Unit Number : CWX2708
Unit Name : CD Core Unit(S10)

MISCELLANEOUS			
IC	201	IC	UPD63712GC
IC	301	IC	BA5996FP
IC	701	IC	NJM2391DL1-33
Q	101	Transistor	2SB1132
D	101	Diode	1SS355
D	701	Diode	1SR154-400
X	201	Ceramic Resonator 16.934MHz	CSS1603
S	901	Spring Switch(HOME)	CSN1051
S	902	Spring Switch(CLAMP)	CSN1051
S	903	Spring Switch(DSCSNS)	CSN1052
S	904	Spring Switch(12EJ)	CSN1051
S	905	Spring Switch(8EJ)	CSN1051
RESISTORS			
R	101		RS1/10S1R5J
R	102		RS1/10S1R5J
R	103		RS1/10S1R5J
R	104		RS1/10S1R5J
R	105		RS1/10S1R5J
R	201		RS1/16S102J
R	202		RS1/16S1002D
R	203		RS1/16S1002D
R	204		RS1/16S1002D
R	205		RS1/16S1002D
R	206		RS1/16S1002D
R	207		RS1/16S1002D
R	208		RS1/16S1002D
R	209		RS1/16S1002D
R	214		RS1/16S103J
R	215		RS1/16S393J
R	216		RS1/16S122J
R	217		RS1/16S562J
R	218		RS1/16S472J
R	234		RS1/16S0R0J
R	235		RS1/16S103J
R	236		RS1/16S103J
R	301		RS1/16S183J
R	302		RS1/16S822J
R	303		RS1/16S183J
R	304		RS1/16S822J
R	305		RS1/16S183J
R	306		RS1/16S183J
R	307		RS1/16S183J
R	308		RS1/16S183J
R	501		RS1/16S102J
R	503		RS1/16S102J
R	505		RS1/16S102J
R	506		RS1/16S221J
R	507		RS1/16S221J
R	508		RS1/16S221J
R	509		RS1/16S221J
R	601		RS1/16S101J
R	602		RS1/16S101J
R	603		RS1/16S0R0J

=====Circuit Symbol and No.	===Part Name	Part No.
R 901		RS1/16S104J
R 902		RS1/16S473J
R 903		RS1/16S273J
CAPACITORS		
C 101		CKSRYB104K16
C 102		CKSRYB104K16
C 103	100µF/16V	CCH1504
C 104	47µF/6.3V	CCH1506
C 106		CCSRCH101J50
C 108		CKSRYB224K16
C 109		CKSRYB224K16
C 201		CKSRYB104K16
C 202		CKSRYB471K50
C 203		CKSRYB104K16
C 205	22µF/6.3V	CCH1507
C 206		CKSRYB103K25
C 207		CKSRYB104K16
C 208	100µF/6.3V	CCH1505
C 209		CKSRYB104K16
C 210		CKSRYB104K16
C 211		CKSRYB104K16
C 212		CKSRYB104K16
C 213		CKSRYB332K50
C 214		CKSRYB473K25
C 215		CKSRYB104K16
C 216		CKSRYB103K25
C 217		CCSRCH560J50
C 218		CCSRCH5R0C50
C 219		CKSRYB104K16
C 220		CKSRYB104K16
C 221		CKSRYB104K16
C 222		CKSRYB103K25
C 223		CCSRCH680J50
C 224		CCSRCH470J50
C 225		CKSRYB682K50
C 231		CKSRYB102K50
C 232		CKSRYB102K50
C 301	100µF/16V	CCH1504
C 302		CCSRCH221J50
C 303		CCSRCH221J50
C 304		CKSRYB472K50
C 305		CKSRYB103K25
C 306		CKSRYB104K16
C 501		CKSRYB103K25
C 502		CKSRYB103K25
C 702	100µF/16V	CCH1504
C 703		CKSRYB224K16
C 704		CKSRYB104K16
C 705	10µF/6.3V	CCH1470

Miscellaneous Parts List

		Pickup Unit(Service)(P10)	CXX1641
M	1	Motor Unit(SPINDLE)	CXB6007
M	2	Motor Unit(LOADING/CARRIAGE)	CXB8933