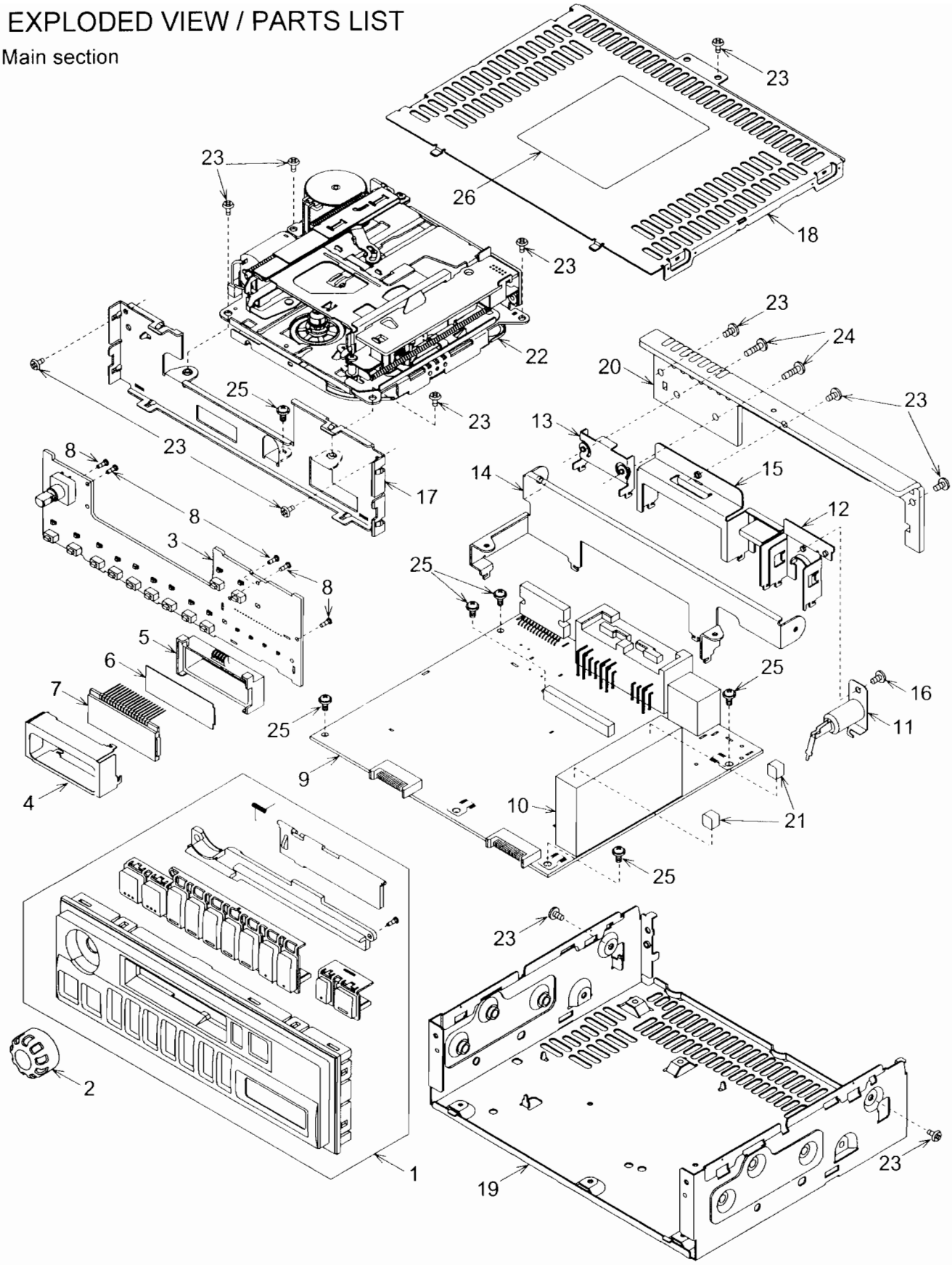
EXPLODED VIEW / PARTS LIST

Main section



NO.	PART NO.	DESCRIPTION	Q'TY
1	940-8024-00	ESCUTCHEON-ASSY	1
2	380-5456-00	KNOB	1
3	039-2360-01	SWITCH PWB (WITHOUT COMPONENT)	1
4	331-3633-00	LCD COVER	1
5	335-6987-00	LCD HOLDER	1
6	335-6988-00	LCD LEFLECTOR	1

NO.	PART NO.	DESCRIPTION	Q'TY
7	379-1272-30	INDICATOR	1
8	716-0872-00	PAD SCREW(M1.7 x 5)	5
9	039-2359-00	MAIN PWB (WITHOUT COMPONENT)	1
10	880-2090D	AM/FM TUNER	1
11	092-0702-00	ANT-RECEPT	1
12	331-3444-10	ANT HOLDER	1

NO.	PART NO.	DESCRIPTION	Q'TY
13	331-3459-00	IC HOLDER	1
14	331-3634-00	MECH BRKT	1
15	331-3635-00	OUTLET HOLDER	1
16	714-2606-81	MACHINE SCREW(M2.6 x 6)	1
17	309-0792-00	ES PLATE	1
18	310-1761-10	UPPER CASE	1
19	311-1860-11	LOWER CASE	1

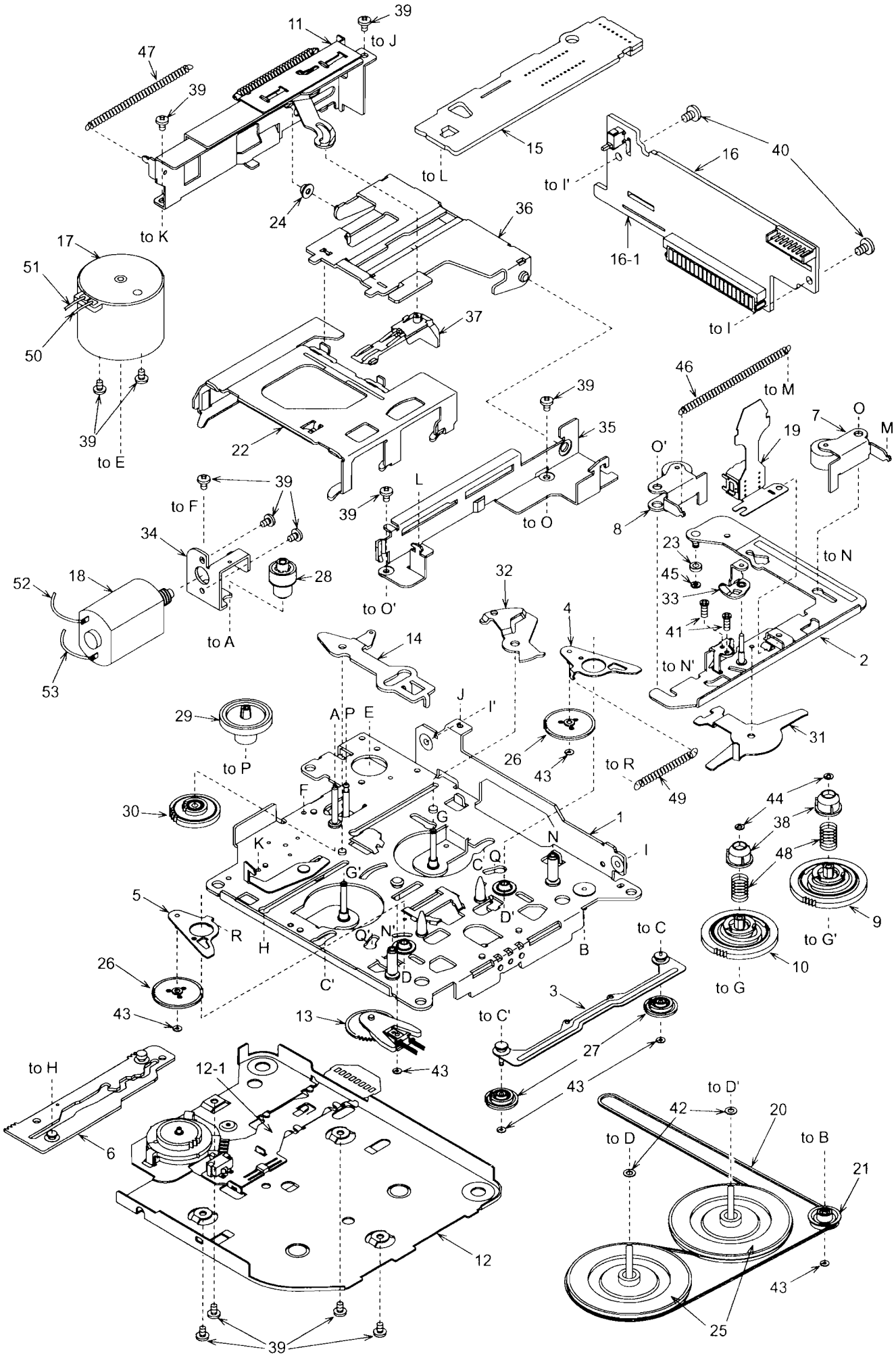
NO.	PART NO.	DESCRIPTION	Q'TY
20	313-1854-10	HEAT SINK	1
21	345-8581-03	GASKET	2
22	930-0735-88	TAPE MECHANISM	1
23	714-2606-81	MACHINE SCREW(M2.6 x 6)	12
24	714-2610-80	MACHINE SCREW(M2.6 x 10)	2
25	716-0878-00	IT-SCREW	6
26	286-6253-50	SETPLATE	1

Tape mechanism section : 930-0735-88

Exploded view on next page

NO.	PART NO.	DESCRIPTION	Q'TY
1	960-4294-22	DECK PLATE-ASSY	1
2	960-4261-20	HEAD PLATE ASSY	1
3	960-4262-03	FF/REW-P-ASSY	1
4	960-4263-03	IDLER-P-ASSY-F	1
5	960-4264-03	IDLER-P-ASSY-R	1
6	960-4266-20	MODE PLATE ASSY	1
7	960-4428-00	ROLLER ASSY F	1
8	960-4429-00	ROLLER ASSY R	1
9	960-4430-00	REEL ASSY F	1
10	960-4431-00	REEL ASSY R	1
11	960-4298-20	EJECT-SUB-ASSY	1
12	960-4446-00	BOTTOM SUB-ASSY	1
12-1	099-9548-00	BOTTOM PWB (WITHOUT COMPONENT)	1
13	960-4282-06	DETECT-SUB-ASSY	1
14	960-4301-02	PLAY-L-ASSY GF	1
15	099-9540-03	SIDE-PWB (WITHOUT COMPONENT)	1
16	990-0692-00	REAR-PWB-ASSY (WITH COMPONENT)	1
16-1	099-9541-00	REAR PWB (WITHOUT COMPONENT)	1
17	SMA-130-100	MOTOR ASSY	1
18	SMA-131-100	MOTOR ASSY	1
19	011-0307-35	HEAD	1
20	602-0118-00	BELT	1
21	604-0046-00	TENSION PULLEY	1
22	606-0101-20	PACK GUIDE	1
23	610-0342-01	HEAD-P-ROLLER	1
24	610-0343-00	GUIDE A ROLLER	1
25	611-0091-03	FLYWHEEL	2

NO.	PART NO.	DESCRIPTION	Q'TY
26	613-0662-00	IDLER GEAR	2
27	613-0286-03	FF/REW GEAR	2
28	613-0288-01	HELICAL GEAR	1
29	613-0289-01	GEAR A	1
30	613-0337-00	POWER GEAR	1
31	630-2597-01	CHANGE LINK	1
32	630-2598-05	EJECT LINK	1
33	630-2600-01	ADJUST LINK	1
34	630-2601-02	MOTER PLATE	1
35	630-2626-84	PWB FRAME	1
36	630-2605-02	GUIDE ARM	1
37	631-1992-02	PACK STOPPER	1
38	631-1993-01	SLIDE BUSH	2
39	716-0484-00	SPECIAL SCREW	13
40	716-0761-01	SPECIAL SCREW	2
41	716-0833-10	AZIMUTH SCREW	2
42	746-0624-00	SPECIAL WASHER	2
43	746-0724-00	SPECIAL WASHER	6
44	746-0761-00	SPECIAL WASHER	2
45	746-0762-00	SPECIAL WASHER	1
46	750-2946-02	PINCH SPRING	1
47	750-2947-03	EJECT-P-SPRING	1
48	750-2949-00	SLIDE SPRING	2
49	750-3017-02	IDLER-P-SPRING	1
50	800-4909-60	VINYL-COAT-WIRE(BLACK)	1
51	802-4909-60	VINYL-COAT-WIRE(RED)	1
52	806-4914-60	VINYL-COAT-WIRE(BLUE)	1
53	816-2349-00	SPECIAL LEAD(WHITE)	1


39
11
to J
47
39
15
to L
to I'
16
40
16-1
to I
24
36
to K
17
51
50
37
22
39
to E
46
to M
39
35
to O
7
O
M
19
O'
8
39
L
39
to F
34
28
to A
to O'
23
45
33
41
to N
to N'
2
52
18
53
32
4
14
29
to P
A
P
E
J
I'
26
43
to R
49
31
30
F
G
1
K
N
I
C
Q
G'
D'
5
R
H
Q'
N'
B
C'
D
26
43
13
43
to C
3
27
43
to C'
44
38
48
9
to G'
10
to G
to H
6
12-1
12
39
to D'
42
20
to D
to B
21
43
25

ELECTRICAL PARTS LIST

Main PWB(B1) section

REF No.	PART No.	DESCRIPTION
ANT101	092-0702-00	ANT RECEPT
BL101	880-2090D	AM/FM TUNER
C101	168-2232-55	0.022uF
C102	168-1032-55	0.01uF
C103	178-1052-78	1uF
C104	188-1073-27	10V 100uF
C105	188-4763-37	16V 47uF
C106	168-2232-55	0.022uF
C107	188-4763-37	16V 47uF
C108	168-2232-55	0.022uF
C109	168-2232-55	0.022uF
C110	168-1532-55	0.015uF
C111	173-1021-18	1000pF J
C112	042-1458-50	50V 1uF LN
C113	168-2732-55	16V 0.027uF
C114	188-4763-37	16V 47uF
C115	168-2732-55	16V 0.027uF
C116	168-2232-55	0.022uF
C117	166-2201-50	22pF CH
C118	166-2201-50	22pF CH
C119	166-2096-50	2pF CK
C120	166-2201-50	22pF CH
C121	166-1011-50	100pF CH
C122	168-4722-55	4700pF
C123	166-2201-50	22pF CH
C124	166-2201-50	22pF CH
C125	166-1011-50	100pF CH
C126	166-1011-50	100pF CH
C127	166-1011-50	100pF CH
C128	166-1011-50	100pF CH
C151	184-1083-29	10V1000uF
C152	168-2232-55	0.022uF
C153	168-3332-78	0.033uF
C154	168-2232-55	0.022uF
C155	168-2232-55	0.022uF
C156	168-3332-78	0.033uF
C157	166-1011-50	100pF CH
C158	166-2201-50	22pF CH
C159	168-2232-55	0.022uF
C201	168-1042-78	16V 0.1uF
C202	042-1452-82	16V 100uF
C203	188-1063-37	16V 10uF
C204	042-0452-82	16V100uF
C206	168-1042-78	16V 0.1uF
C207	168-1042-78	16V 0.1uF
C208	168-1042-78	16V 0.1uF
C301	188-1063-37	16V 10uF
C302	168-1042-78	16V 0.1uF
C303	168-1042-78	16V 0.1uF
C304	188-1063-37	16V 10uF
C305	188-2263-17	6.3V 22uF
C306	178-4742-78	0.47uF
C307	178-4742-78	0.47uF
C308	188-1053-67	50V 1uF
C309	188-1053-67	50V 1uF
C310	178-1842-78	0.18uF
C311	178-1842-78	0.18uF
C312	178-1842-78	0.18uF
C313	178-1842-78	0.18uF
C314	168-8212-55	820pF
C315	168-8212-55	820pF
C316	168-8212-55	820pF
C317	168-8212-55	820pF
C318	188-1063-37	16V 10uF
C319	188-1063-37	16V 10uF
C320	168-1832-55	0.018uF
C321	168-1222-55	1200pF
C322	168-1222-55	1200pF
C323	168-8222-55	8200pF
C401	166-1011-50	100pF CH
C402	166-1011-50	100pF CH
C403	166-1011-50	100pF CH
C404	166-1501-50	15pF CH
C405	166-1201-50	12pF CH
C406	168-1022-55	1000pF
C407	166-1011-50	100pF CH
C408	166-1011-50	100pF CH
C409	166-1011-50	100pF CH
C410	168-1022-55	1000pF
C411	166-1011-50	100pF CH
C412	168-1022-55	1000pF
C413	168-1042-78	16V 0.1uF
C414	188-4763-37	16V 47uF
C415	166-1011-50	100pF CH
C501	188-1063-37	16V 10uF
C502	188-1063-37	16V 10uF
C503	188-1063-37	16V 10uF
C504	188-1063-37	16V 10uF
C506	168-2222-55	2200pF
C601	168-1032-55	0.01uF
C602	168-2232-55	0.022uF
C603	168-1032-55	0.01uF
C604	172-3931-15	0.039uF
C605	172-3931-15	0.039uF
C606	172-3931-15	0.039uF
C607	172-3931-15	0.039uF
C608	188-1063-37	16V 10uF
C609	188-1053-67	50V 1uF
C610	166-2201-50	22pF CH
C611	166-2201-50	22pF CH
C612	166-2201-50	22pF CH
C613	166-2201-50	22pF CH
C614	188-1053-67	50V 1uF
C615	168-1042-78	16V 0.1uF
C701	168-2222-55	2200pF
C702	172-1041-15	0.1uF
C703	168-2222-55	2200pF
C704	168-2222-55	2200pF
C705	168-2222-55	2200pF
C706	168-2222-55	2200pF
C707	189-3383-32	16V 3300uF
C708	168-2222-55	2200pF
C709	168-2222-55	2200pF
C710	168-2222-55	2200pF
C711	168-2222-55	2200pF
C712	188-1063-37	16V 10uF
C713	168-1042-78	16V 0.1uF
C801	188-1053-67	50V 1uF
C901	168-1042-78	16V 0.1uF
C902	189-2273-39	16V 220uF
C903	188-1063-37	16V 10uF
C904	188-4763-17	6.3V 47uF
C905	168-1042-78	16V 0.1uF
C906	188-4763-17	6.3V 47uF
C907	168-2232-55	0.022uF
C908	188-1063-37	16V 10uF
C909	172-1041-15	0.1uF
C910	168-1022-55	1000pF
C911	042-0452-82	16V100uF
CCT201	050-0145-55	10k x 4
CCT401	050-0145-52	1/16W 1k ohm x4
CCT402	050-0145-52	1/16W 1k ohm x4
CCT403	050-0145-52	1/16W 1k ohm x4
CCT404	050-0145-52	1/16W 1k ohm x4
CCT405	050-0145-52	1/16W 1k ohm x4
CCT406	050-0145-52	1/16W 1k ohm x4
CCT407	050-0145-52	1/16W 1k ohm x4
D201	001-0347-37	MA4068L
D401	001-0516-90	MA111
D601	001-0516-90	MA111
D701	001-0466-90	S5688B
D702	001-2015-00	RL253
D703	001-0466-90	S5688B
D801	001-0347-34	MA4062L
D901	001-0347-41	MA4075M
D902	001-0347-48	MA4091H
D903	001-0516-90	MA111
D904	001-0504-32	HZS6A3L
IC201	051-1014-08	TA7291F
IC301	051-5027-00	LC75412WH
IC401	052-1179-01	LC72336-9B87
IC601	051-2040-00	TA8276H
J501	074-0850-08	8P
J701	074-1141-00	NS10+6
L101	010-2003-04	COIL
L102	010-6009-76	22uH
L151	010-6009-66	3.3 Uh
L401	010-6009-64	2.2uH
L701	009-0670-81	CHOKE
P201	076-0433-20	20P
P401	076-0648-16	16P
P402	076-0648-18	18P
Q101	190-1162-00	2SA1162
Q102	190-1162-00	2SA1162
Q103	192-2712-51	2SC2712G,L
Q104	192-2712-51	2SC2712G,L
Q105	125-2004-93	RN1403
Q106	190-1298-00	2SA1298
Q151	125-2004-94	RN1404
Q152	125-0002-92	RN2402
Q153	125-0002-92	RN2402
Q154	125-2004-92	RN1402
Q155	125-2004-92	RN1402
Q201	190-1428-00	2SA1428
Q202	125-2004-96	RN1406
Q203	125-0002-92	RN2402
Q501	125-2004-92	RN1402
Q502	125-0002-92	RN2402
Q503	125-2004-92	RN1402
Q801	125-0002-92	RN2402
Q802	192-2712-00	2SC2712
Q901	193-1858-00	2SD1858
Q902	192-2712-00	2SC2712
Q903	193-2118-00	2SD2118
Q904	190-1298-00	2SA1298
Q905	125-2004-92	RN1402
Q906	125-0002-92	RN2402
Q907	125-2004-92	RN1402
Q908	193-1858-00	2SD1858
Q909	125-2004-94	RN1404
Q910	191-0709-00	2SB709A-Q,R,S
Q911	100-1359-00	2SA1359
Q912	125-2004-92	RN1402
Q913	193-0601-00	2SD601A
R101	116-1801-15	1/8W 18 ohm
R102	119-1021-15	1/16W 1k ohm
R103	119-2221-15	1/16W 2.2k ohm
R104	119-6821-15	1/16W 6.8k ohm
R105	119-5631-15	1/16W 56k ohm
R106	116-1501-15	1/8W 150 ohm
R107	119-0000-05	1/16W 0 ohm JW
R108	116-3391-15	1/4W 3.3 ohm
R109	119-2221-15	1/16W 2.2k ohm
R110	119-4741-15	1/16W 470k ohm
R111	119-1521-15	1/16W 1.5k ohm
R112	119-1031-15	1/16W 10k ohm
R113	119-1031-15	1/16W 10k ohm
R114	119-1521-15	1/16W 1.5k ohm
R115	119-0000-05	1/16W 0 ohm JW
R117	119-3321-15	1/16W 3.3k ohm
R118	119-4721-15	1/16W 4.7k ohm
R119	119-1021-15	1/16W 1k ohm
R120	119-1021-15	1/16W 1k ohm

REF No.	PART No.	DESCRIPTION
R121	119-1031-15	1/16W 10k ohm
R122	119-1521-15	1/16W 1.5k ohm
R123	116-3391-15	1/4W 3.3 ohm
R124	119-0000-05	1/16W 0 ohm JW
R125	116-0000-05	1/8W 0 ohm
R151	119-0000-05	1/16W 0 ohm JW
R152	119-1811-15	1/16W 180 ohm
R153	119-1041-15	1/16W 100k ohm
R154	119-2221-15	1/16W 2.2k ohm
R155	116-4791-15	4.7 ohm J
R156	119-4721-15	1/16W 4.7k ohm
R157	119-4721-15	1/16W 4.7k ohm
R158	116-3391-15	1/4W 3.3 ohm
R207	119-1041-15	1/16W 100k ohm
R208	119-1021-15	1/16W 1k ohm
R209	119-1031-15	1/16W 10k ohm
R210	116-1221-15	1/8W 1.2k ohm
R211	116-1221-15	1/8W 1.2k ohm
R212	116-1001-15	1/8W 10 ohm
R213	119-2221-15	1/16W 2.2k ohm
R215	116-1001-15	1/8W 10 ohm
R216	116-1001-15	1/8W 10 ohm
R217	116-1001-15	1/8W 10 ohm
R218	119-1031-15	1/16W 10k ohm
R301	119-0000-05	1/16W 0 ohm JW
R302	119-0000-05	1/16W 0 ohm JW
R303	119-0000-05	1/16W 0 ohm JW
R304	119-0000-05	1/16W 0 ohm JW
R305	119-1821-15	1/16W 1.8k ohm
R306	119-1821-15	1/16W 1.8k ohm
R307	119-3931-15	1/16W 39k ohm
R308	119-3931-15	1/16W 39k ohm
R309	119-4721-15	1/16W 4.7k ohm
R310	119-4721-15	1/16W 4.7k ohm

REF No.	PART No.	DESCRIPTION
R311	119-4721-15	1/16W 4.7k ohm
R312	119-4721-15	1/16W 4.7k ohm
R317	119-0000-05	1/16W 0 ohm JW
R318	119-0000-05	1/16W 0 ohm JW
R319	032-0106-52	1/10W 27k ohm D
R320	032-0106-52	1/10W 27k ohm D
R321	032-0106-52	1/10W 27k ohm D
R322	032-0106-52	1/10W 27k ohm D
R401	119-2231-15	1/16W 22k ohm
R402	119-0000-05	1/16W 0 ohm JW
R403	119-1031-15	1/16W 10k ohm
R406	119-1021-15	1/16W 1k ohm
R407	119-2221-15	1/16W 2.2k ohm
R408	119-1031-15	1/16W 10k ohm
R409	119-4731-15	1/16W 47k ohm
R410	119-4731-15	1/16W 47k ohm
R411	119-4731-15	1/16W 47k ohm
R412	119-2231-15	1/16W 22k ohm
R413	119-1021-15	1/16W 1k ohm
R414	119-1021-15	1/16W 1k ohm
R415	119-1021-15	1/16W 1k ohm
R416	119-4731-15	1/16W 47k ohm
R417	119-4731-15	1/16W 47k ohm
R418	119-4731-15	1/16W 47k ohm
R419	119-2231-15	1/16W 22k ohm
R420	119-1031-15	1/16W 10k ohm
R421	119-2221-15	1/16W 2.2k ohm
R422	119-4731-15	1/16W 47k ohm
R423	119-1021-15	1/16W 1k ohm
R424	119-1021-15	1/16W 1k ohm
R425	119-2231-15	1/16W 22k ohm
R426	119-1021-15	1/16W 1k ohm
R427	119-1021-15	1/16W 1k ohm
R428	119-1021-15	1/16W 1k ohm

REF No.	PART No.	DESCRIPTION
R431	119-1021-15	1/16W 1k ohm
R501	119-3011-15	1/16W 300 ohm
R502	119-3011-15	1/16W 300 ohm
R503	119-4731-15	1/16W 47k ohm
R504	116-8211-15	1/8W 820 ohm
R505	116-8211-15	1/8W 820 ohm
R601	119-8221-15	1/16W 8.2k ohm
R701	114-4701-18	47 ohm J
R801	119-1031-15	1/16W 10k ohm
R802	119-5611-15	1/16W 560 ohm
R803	116-1531-15	1/8W 15k ohm
R901	116-5611-15	1/8W 560 ohm
R902	119-1031-15	1/16W 10k ohm
R903	119-6821-15	1/16W 6.8k ohm
R904	116-3311-15	1/8W 330 ohm
R905	116-1821-15	1/4W 1.8k ohm
R906	119-2231-15	1/16W 22k ohm
R907	119-1031-15	1/16W 10k ohm
R908	119-4721-15	1/16W 4.7k ohm
R909	116-1221-15	1/8W 1.2k ohm
R910	116-1221-15	1/8W 1.2k ohm
R911	116-5691-15	1/4W 5.6 ohm
R912	116-5691-15	1/4W 5.6 ohm
R913	119-1031-15	1/16W 10k ohm
R914	119-1031-15	1/16W 10k ohm
SUP101	060-0122-20	DSP-141N-S00B
TC401	004-1580-60	30pF
TM101	073-0762-90	TERMINAL
TM701	073-0762-90	TERMINAL
TM997	073-0762-90	TERMINAL
TM998	073-0762-90	TERMINAL
TM999	073-0762-90	TERMINAL
X401	061-3501-90	4.5MHz

Switch PWB(B2) section

REF No.	PART No.	DESCRIPTION
D1001	001-7048-96	RAY1112H-75M
D1002	001-7048-96	RAY1112H-75M
D1003	001-7048-96	RAY1112H-75M
D1004	001-7048-96	RAY1112H-75M
D1005	001-7063-91	RAY1102W
D1006	001-7063-91	RAY1102W
D1007	001-7063-91	RAY1102W
D1008	001-7063-91	RAY1102W
D1009	001-7063-91	RAY1102W
D1010	001-7063-91	RAY1102W
D1011	001-7063-91	RAY1102W
D1012	001-7063-91	RAY1102W

REF No	PART No.	DESCRIPTION
D1013	001-7063-91	RAY1102W
D1014	001-7063-91	RAY1102W
D1015	001-7063-91	RAY1102W
J1001	074-1279-66	16P
J1002	074-1279-68	18P
LCD1001	379-1272-30	INDICATOR
R1001	119-3911-15	1/16W 390 ohm
R1002	119-3911-15	1/16W 390 ohm
R1003	116-4711-15	1/8W 470 ohm
R1004	116-4711-15	1/8W 470 ohm
R1005	116-4711-15	1/8W 470 ohm
R1006	116-6811-15	1/8W 680 ohm

REF No.	PART No.	DESCRIPTION
S1001	013-6305-50	SKQMAH
S1002	013-6305-50	SKQMAH
S1003	013-6305-50	SKQMAH
S1004	013-6305-50	SKQMAH
S1005	013-6305-50	SKQMAH
S1006	013-6305-50	SKQMAH
S1007	013-6305-50	SKQMAH
S1008	013-6305-50	SKQMAH
S1009	013-6305-50	SKQMAH
S1010	013-6305-50	SKQMAH
S1011	013-6305-50	SKQMAH
VR1001	016-0018-05	VOL/POWER

Tape mechanism section

Side PWB(B3) section

REF No.	PART No.	DESCRIPTION
C1	176-5611-50	560pF CH
C2	176-5611-50	560pF CH
C3	175-5611-50	560pF CH
C4	175-5611-50	560pF CH
C5	188-4763-17	6.3V 47uF
C6	042-1552-01	10V 33uF
C7	042-1552-01	10V 33uF
C8	173-1231-19	0.012uF J
C9	173-1231-19	0.012uF J
C10	188-4753-57	35V 4.7uF
C11	188-1043-67	50V 0.1uF
C12	175-5611-50	560pF CH

REF No.	PART No.	DESCRIPTION
C13	188-4743-68	50V 0.47uF
C14	188-2263-37	16V22uF
C15	188-4753-57	35V 4.7uF
C16	188-4753-57	35V 4.7uF
C17	168-1042-78	16V 0.1uF
IC1	051-1546-10	BA3430S
P1	074-0881-08	8P
R1	116-2731-15	1/4W 27k ohm
R2	116-2731-15	1/4W 27k ohm
R3	117-2731-15	1/8W 27k ohm
R4	117-2731-15	1/8W 27k ohm
R5	116-1011-15	1/4W 100 ohm

REF No.	PART No.	DESCRIPTION
R6	116-1011-15	1/4W 100 ohm
R7	117-3341-15	1/8W 330k ohm
R8	117-1131-15	1/8W 11k ohm
R9	117-1531-15	1/8W 15k ohm
R10	117-1531-15	1/8W 15k ohm
R11	117-1131-15	1/8W 11k ohm
R12	117-3341-15	1/8W 330k ohm
R13	117-1811-15	1/8W 180 ohm
R14	117-8211-15	1/8W 820 ohm
R15	116-2231-15	1/4W 22k ohm
R16	117-1031-15	1/8W 10k ohm
R17	117-1031-15	1/8W 10k ohm

Bottom PWB(B4) section

REF No.	PART No.	DESCRIPTION
IC2	051-1114-03	NJL5161K
SW1	013-3951-32	MODE SWITCH
SW2	013-3953-01	SPPB32

Rear PWB(B5) section

REF No.	PART No.	DESCRIPTION
J1	074-0978-20	20P
P2	076-0353-08	8P
SW3	013-3906-00	SPPB51