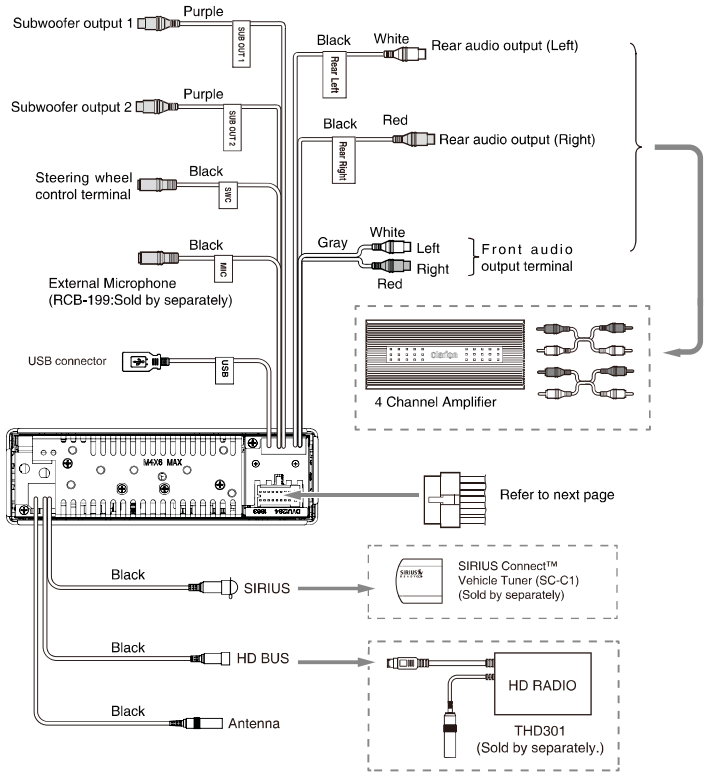
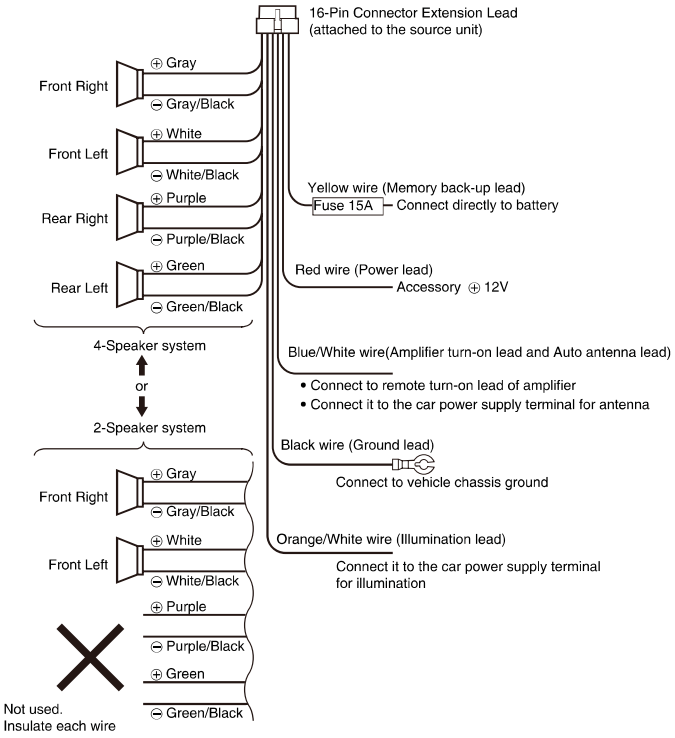
WIRING CONNECTION





PARTS LIST

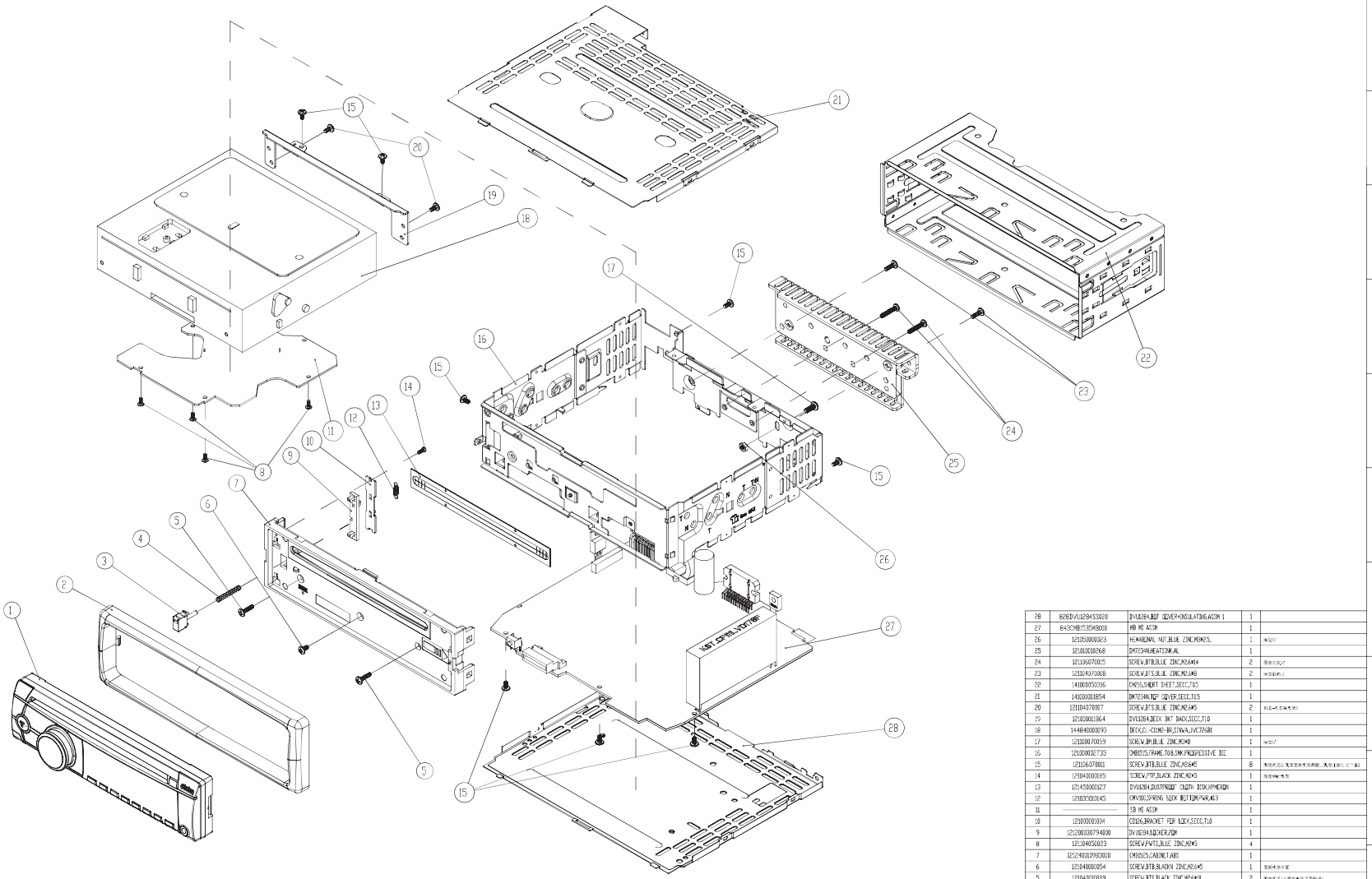
Quotation of assembly parts for CZ702

Updated: 10rd, FEB 2012

NO.	Clarion Model	Part NO #	Qty	MOQ	Description	Lead time(day)	Assembly parts Picture
1	9482CMB1535194A	843CMB1535AMB005	1	30	CMB1535 MB MI	TBC	
2	9482CMB1535194A	843CMB1533SB004	1	30	CMB1535 SB MI	TBC	
3	9482CMB1535194A	143830001236	1	30	I/O,CM1511,15P,130MM	TBC	
4	9482CMB1535194A	843CMB1535AKB002	1	30	CMB1535 KB MI	TBC	
5	9482CMB1535194A	121270000500000	1	30	Outter Escutcheon	TBC	
6	9482CMB1535194A	828DVU1284SS020	1	30	Lower Cover	TBC	
7	9482CMB1535194A	141000001854	1	30	Upper Cover (Mountain Bracket)	TBC	
8	9482CMB1535194A	845CMU1522SA000	1	30	Inner Escutcheon Assy	TBC	
9	9482CMB1535194A	123830001314	1	30	HD BUS/SIRIUS BUS输出线	TBC	
10	9482CMB1535194A	123830001330	1	30	WIRE HARNES	TBC	
11	9482CMB1535194A	141045000200	2	200	Lock Screw	*TBC*	
12	9482CMB1535194A	121090000327	2	200	L-KEY	TBC	
13	9482CMB1535194A	843CM1521RMT010	1	30	REMOTE CONTROL	TBC	

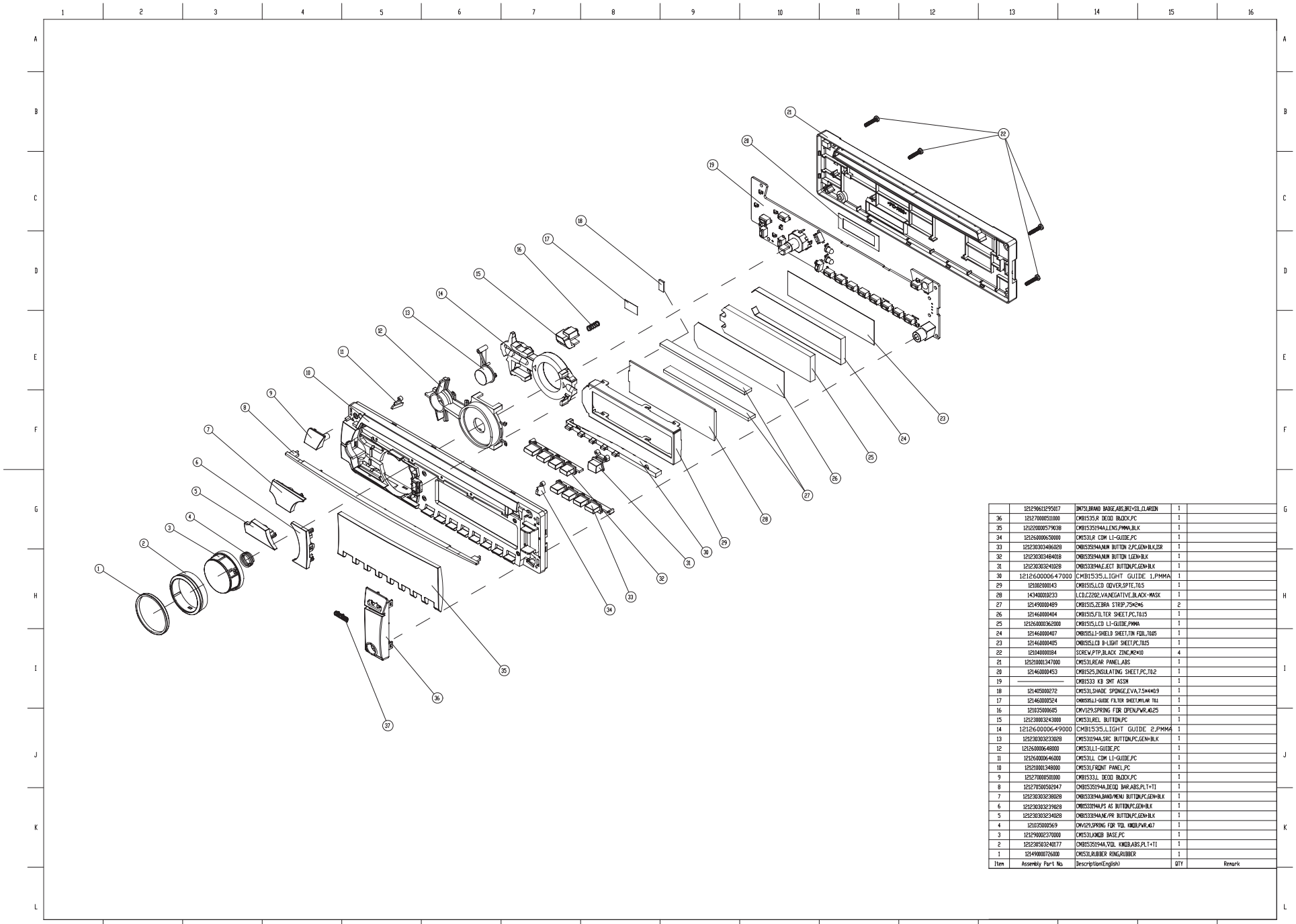
EXPLODED VIEW / PARTS LIST

Main section



Item	Assembly Part No.	Description/English	QTY	Remark
28	628DVU1284S3020	DVU1284,BOT COVER+INSULATING ASSM 1	1	
27	843CMB1535M8000	MB MC ASSM	1	
26	12105080023	HEADUNIT, MF,BLUE ZINC,MSM25,	1	
25	12101018268	DVT234N,HEATSINK,AL	1	
24	12110607005	SCREW,BTB,BLUE ZINC,M2.6X14	2	
23	12104073008	SCREW,BTS,BLUE ZINC,M2.6X8	2	
22	14100053036	CMD15,SHORT SHEET,SECC,T0.5	1	
21	14100081854	DVT234N,TOP COVER,SECC,T0.5	1	
20	12104070007	SCREW,BTS,BLUE ZINC,M2.6X5	2	
19	12100011864	DVU1284,DECK 3KT BACK,SECC,T1.0	1	
18	14484000093	DECK,CL-CDMD-BR,SINWA,JVC726B1	1	
17	12110070059	SCREW,BH,BLUE ZINC,M3*8	1	
16	12100002733	CMB1515,FRAME,T0.8,0M,PROGRESSIVE DIE	1	
15	12110607001	SCREW,BTB,BLUE ZINC,M2.6X5	8	
14	12104000365	SCREW,PTP,BLACK ZINC,M3X5	1	
13	12145000327	DVU1284,DUSTPROOF CLOTH DISK,HYPERSIN	1	
12	12103500345	CMV100,SPRING NECK BUTTON,PWR,W3	1	
11		SB MC ASSM	1	
10	12100001034	CD126,BRACKET FDP NECK,SECC,T1.0	1	
9	12120030794000	DVU1284,ADJCHER,PDM	1	
8	12110405023	SCREW,PWTS,BLUE ZINC,M3X5	4	
7	12124010959010	CMB1525,CABINET,ABS	1	
6	12104000354	SCREW,BTB,BLACK ZINC,M2.6X5	1	
5	12104030089	SCREW,BTS,BLACK ZINC,M2.6X10	2	
4	12103500364	CD126,SPRING FOR OPEN CAP,PWR,W3	1	
3	14129020040000	CD126,CAP OPEN,PDM	1	
2	12127000500000	CMB1535,TRIM PLATE,ABS	1	
1	843CMB1535AK002	KB MC ASSM	1	

Panel section



	12129061295017	BM751,BRAND BADGE,ABS,BRZ+SIL,CLARION	1	
36	12127000051000	CMB1535,R DECO BLOCK,PC	1	
35	12122000057903B	CMB1525194A,LENS,PMMA,BLK	1	
34	12126000650000	CM1531,R CDM LI-GUIDE,PC	1	
33	12123030348602B	CMB1535194A,NUM BUTTON 2,PC,GEN-BLK,ISR	1	
32	12123030348401B	CMB1535194A,NUM BUTTON 1,GEN-BLK	1	
31	12123030324102B	CMB1533194A,EJECT BUTTON,PC,GEN-BLK	1	
30	12126000064700O	CMB1535,LIGHT GUIDE 1,PMMA	1	
29	12100200143	CMB1515,LCD COVER,SPTE,T0.5	1	
28	14340000233	LCD,CZ202,VA,NEGATIVE,BLACK-MASK	1	
27	12149000489	CMB1515,ZEBRA STRIP,7.5*2*6	2	
26	12146000404	CMB1515,FILTER SHEET,PC,T0.15	1	
25	12126000362000	CMB1515,LCD LI-GUIDE,PMMA	1	
24	12146000407	CMB1515,LI-SHIELD SHEET,TIN FOIL,T0.05	1	
23	12146000405	CMB1515,LCD B-LIGHT SHEET,PC,T0.15	1	
22	12104000184	SCREW,PTP,BLACK ZINC,M2*10	4	
21	12121000347000	CM1531,REAR PANEL,ABS	1	
20	12146000453	CMB1525,INSULATING SHEET,PC,T0.2	1	
19	————	CMB1533 KB SMT ASSM	1	
18	12145000272	CM1531,SHADE SPONGE,EVA,7.5*4*0.9	1	
17	12146000524	CMB1535,LI-GUIDE FILTER SHEET,MYLAR T0.1	1	
16	12103500605	CMV129,SPRING FOR OPEN,PWR,Φ1.25	1	
15	12123000324300O	CM1531,REL BUTTON,PC	1	
14	12126000064900O	CMB1535,LIGHT GUIDE 2,PMMA	1	
13	12123030323002B	CM1531194A,SRC BUTTON,PC,GEN+BLK	1	
12	12126000064800	CM1531,LI-GUIDE,PC	1	
11	12126000064600	CM1531,L CDM LI-GUIDE,PC	1	
10	12121000134800O	CM1531,FRONT PANEL,PC	1	
9	12127000050000	CMB1533,L DECO BLOCK,PC	1	
8	12127050050204 7	CMB1535194A,DECO BAR,ABS,PLT+TI	1	
7	12123030323802B	CMB1533194A,BAND/MENU BUTTON,PC,GEN-BLK	1	
6	12123030323902B	CMB1533194A,PS AS BUTTON,PC,GEN+BLK	1	
5	12123030323402B	CMB1533194A,NE/PR BUTTON,PC,GEN-BLK	1	
4	12103500056 9	CMV129,SPRING FOR VOL KNOB,PWR,Φ1.7	1	
3	12129000237000O	CM1531,KNOB BASE,PC	1	
2	12123050324017 7	CMB1535194A,VOL KNOB,ABS,PLT+TI	1	
1	12149000726000	CM1531,RUBBER RING,RUBBER	1	
Item	Assembly Part No.	Description(English)	QTY	Remark