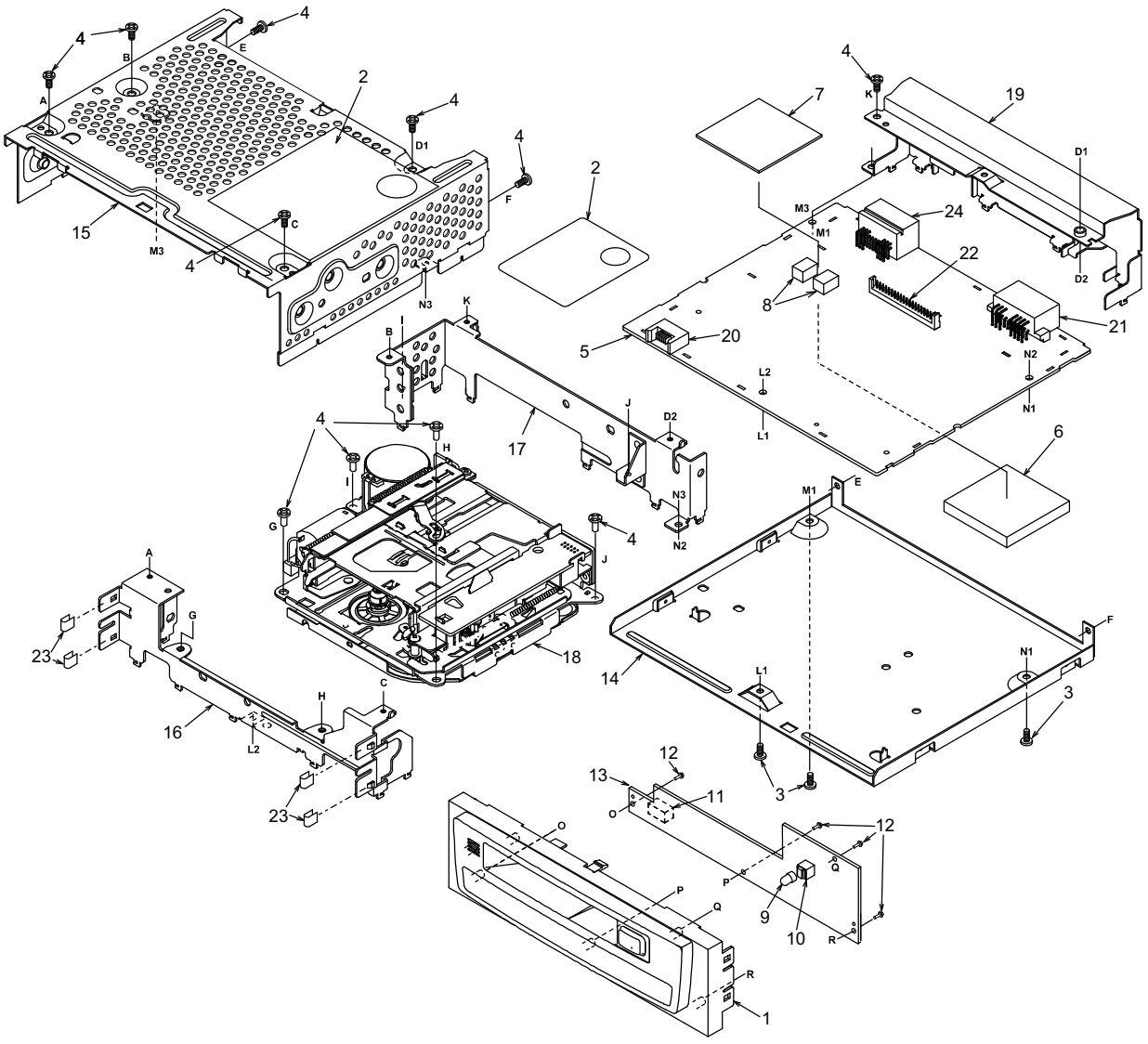
EXPLODED VIEW/PARTS LIST

Main section



Note)Some parts depend on each model. The model name is specified in the discription.
PP8211V : PP-8211V-A , PN8211I : PN-8211I-A

NO.	PART NO.	DESCRIPTION	Q'TY
1	940-8174-00 940-8174-10	ES-ASSY (BLACK) (PP8211V) ES-ASSY (GLAY) (PN8211I)	1
2	286-6490-05 286-9493-07	SETPLATE (PP8211V) SETPLATE (PN8211I)	1
3	716-1494-50	IT SCREW (M2.6x6)	3
4	714-2606-8B	MACHINE SCREW (M2.6x6)	11
5	----------	Main PWB	1
6	345-8587-00	CUSHION RUBBER	1
7	345-8586-00	CUSHION RUBBER	1
8	014-0580-00	RERAY	2
9	017-0420-31 017-0420-50	PL-LAMP (BLUE) (PP8211V) PL-LAMP (REDDISH ORANGE) (PN8211I)	1
10	013-3934-02	SWITCH	1
11	074-3034-06	OUTLET SOCKET (6P)	1

NO.	PART NO.	DESCRIPTION	Q'TY
12	716-0778-50	WAVE SCREW(M2x6)	4
13	----------	Switch PWB	1
14	311-1758-03	LOWER CASE	1
15	310-1663-01	UPPER CASE	1
16	309-0732-01	FRONT PLATE	1
17	331-2471-10	MECH BRKT	1
18	930-0792-87	TAPE MECH	1
19	331-3043-00	REAR PLATE	1
20	076-0540-06	PLUG(6P)	1
21	074-1268-00	OUTLET SOCKET (16P)	1
22	076-0461-20	PLUG (20P)	1
23	347-5893-00	TAPE	4
24	074-1087-02	OUTLET SOCKET (16P)	1

ELECTRICAL PARTS LIST

Main PWB(B1) section

REF No.	PART No.	DESCRIPTION
C103	168-3332-78	0.033uF K
C104	168-1032-55	0.01uF K
C105	168-3332-78	0.033uF K
C107	168-1532-55	0.015uF K
C108	188-1053-68	50V 1uF
C109	188-3353-68	50V 3.3uF
C110	168-1022-55	1000pF K
C111	168-1022-55	1000pF K
C112	168-1022-55	1000pF K
C113	168-1032-55	0.01uF K
C114	168-1042-78	16V 0.1uF K
C115	168-1042-78	16V 0.1uF K
C116	168-1042-78	16V 0.1uF K
C117	168-1042-78	16V 0.1uF K
C118	168-1042-78	16V 0.1uF K
C119	165-1063-35	16V 10uF
C202	168-1042-78	16V 0.1uF K
C203	187-1073-37	16V 100uF
C301	168-3332-78	0.033uF K
C302	168-3332-78	0.033uF K
C303	168-3332-78	0.033uF K
C304	168-3332-78	0.033uF K
C305	168-1032-55	0.01uF K
C306	168-1032-55	0.01uF K
C307	188-1063-38	16V 10uF
C308	188-1063-38	16V 10uF
C309	166-8201-50	82pF CH
C310	166-8201-50	82pF CH
C311	166-8201-50	82pF CH
C312	166-8201-50	82pF CH
C313	165-4763-15	6.3V 47uF
C314	188-1073-28	10V 100uF
C315	188-1073-28	10V 100uF
C316	188-1073-28	10V 100uF
C317	188-1073-28	10V 100uF
C318	188-4753-58	35V 4.7uF
C319	172-1031-15	0.01uF
C320	172-1031-15	0.01uF
C321	172-1031-15	0.01uF
C322	172-1031-15	0.01uF
C501	168-3332-78	0.033uF K
C502	168-3332-78	0.033uF K
C503	188-1073-28	10V 100uF
C504	187-1073-37	16V 100uF
C505	188-1063-38	16V 10uF
C506	188-1063-38	16V 10uF
C507	166-1007-50	10pF CH
C508	189-4773-38	16V 470uF
C509	172-1041-15	0.1uF
C510	189-4773-38	16V 470uF
C511	189-4773-38	16V 470uF
C512	188-1063-38	16V 10uF
C513	172-1041-15	0.1uF
C801	168-1042-78	16V 0.1uF K
D103	001-0516-90	MA111
D104	001-0516-90	MA111
D105	001-4305-39	UDZSTE-17 36B
D106	001-0516-90	MA111
D202	001-0516-90	MA111
D203	001-0529-38	MA8068-M
D501	001-0504-32	HZS6 A3L
D502	001-0529-48	MA8091-H
D504	001-0529-45	MA8082-H
D506	001-2015-00	RL253
D507	001-2403-90	M1F60
D801	001-0529-48	MA8091-H
D802	001-0529-48	MA8091-H
D803	001-0529-48	MA8091-H

REF No.	PART No.	DESCRIPTION
D804	001-0529-48	MA8091-H
D807	001-0529-48	MA8091-H
D808	001-0529-48	MA8091-H
D809	001-2403-90	M1F60
D810	001-2403-90	M1F60
IC101	052-4007-20	S9S08AW8AE0
IC102	051-0869-58	NJM2103M
IC201	051-1014-10	TA7291S
IC301	051-0350-93	NJM4558M
IC302	051-0350-93	NJM4558M
IC801	051-0267-08	TC4066BF
P101	076-0461-20	20P
P501	076-0540-06	6P
P801	074-1087-02	16P
P802	074-1268-00	16P
Q101	125-0002-93	RN2403
Q102	125-2004-94	RN1404
Q105	125-2004-94	RN1404
Q106	125-0002-92	RN2402
Q107	125-2004-92	RN1402
Q108	125-0002-94	RN2404
Q109	125-2004-92	RN1402
Q110	125-0002-92	RN2402
Q111	192-2712-00	2SC2712
Q112	192-2712-00	2SC2712
Q113	192-2712-00	2SC2712
Q201	190-1431-00	2SA1431
Q202	125-2004-96	RN1406
Q203	190-1431-00	2SA1431
Q204	125-2004-96	RN1406
Q301	193-1450-00	2SD1450 R,S,T
Q302	193-1450-00	2SD1450 R,S,T
Q303	125-2004-92	RN1402
Q304	193-1450-00	2SD1450 R,S,T
Q305	193-1450-00	2SD1450 R,S,T
Q306	125-0002-92	RN2402
Q501	193-1858-00	2SD1858
Q502	193-1858-00	2SD1858
Q503	190-1428-00	2SA1428
Q504	125-2004-92	RN1402
Q801	125-0002-92	RN2402
Q802	192-2712-00	2SC2712
Q803	125-0002-92	RN2402
Q804	192-2712-00	2SC2712
R100	117-4721-15	1/8W 4.7k ohm
R102	117-1041-15	1/8W 100k ohm
R103	117-1041-15	1/8W 100k ohm
R104	117-1041-15	1/8W 100k ohm
R105	117-1031-15	1/8W 10k ohm
R106	117-1051-15	1/8W 1M ohm
R107	119-1021-15	1/10W 1k ohm
R108	119-3311-15	1/10W 330 ohm
R109	119-3311-15	1/10W 330 ohm
R110	119-3311-15	1/10W 330 ohm
R111	119-1021-15	1/10W 1k ohm
R113	117-1031-15	1/8W 10k ohm
R114	117-1041-15	1/8W 100k ohm
R115	117-2221-15	1/8W 2.2k ohm
R116	117-1031-15	1/8W 10k ohm
R117	116-1031-15	1/4W 10k ohm
R118	117-1031-15	1/8W 10k ohm
R119	117-5631-15	1/8W 56k ohm
R120	117-5621-15	1/8W 5.6k ohm
R121	117-1031-15	1/8W 10k ohm
R122	117-1031-15	1/8W 10k ohm
R123	117-5631-15	1/8W 56k ohm
R124	117-5631-15	1/8W 56k ohm
R125	116-1031-15	1/4W 10k ohm

REF No.	PART No.	DESCRIPTION
R126	116-1031-15	1/4W 10k ohm
R127	116-1031-15	1/4W 10k ohm
R128	116-1031-15	1/4W 10k ohm
R129	116-1031-15	1/4W 10k ohm
R130	116-1031-15	1/4W 10k ohm
R202	116-1521-15	1/4W 1.5k ohm
R203	117-1021-15	1/8W 1k ohm
R204	116-1521-15	1/4W 1.5k ohm
R205	117-1031-15	1/8W 10k ohm
R206	117-2221-15	1/8W 2.2k ohm
R207	114-2291-11	1W 2.2 ohm
R208	116-1521-15	1/4W 1.5k ohm
R209	116-1521-15	1/4W 1.5k ohm
R301	117-5621-15	1/8W 5.6k ohm
R302	117-5621-15	1/8W 5.6k ohm
R303	117-5621-15	1/8W 5.6k ohm
R304	117-5621-15	1/8W 5.6k ohm
R305	117-1041-15	1/8W 100k ohm
R306	117-1041-15	1/8W 100k ohm
R307	117-2201-15	1/8W 22 ohm
R308	117-2201-15	1/8W 22 ohm
R309	117-2231-15	1/8W 22k ohm
R310	117-4731-15	1/8W 47k ohm
R311	117-1631-15	1/8W 16k ohm
R312	117-1631-15	1/8W 16k ohm
R313	117-4731-15	1/8W 47k ohm
R314	117-2231-15	1/8W 22k ohm
R315	117-1031-15	1/8W 10k ohm
R316	117-1031-15	1/8W 10k ohm
R317	117-2231-15	1/8W 22k ohm
R318	117-2231-15	1/8W 22k ohm
R319	117-2201-15	1/8W 22 ohm
R320	117-2201-15	1/8W 22 ohm
R321	117-2231-15	1/8W 22k ohm
R322	117-2231-15	1/8W 22k ohm
R323	117-1231-15	1/8W 12k ohm
R324	117-1031-15	1/8W 10k ohm
R325	116-2201-15	1/4W 22 ohm
R326	116-2201-15	1/4W 22 ohm
R327	116-2201-15	1/4W 22 ohm
R328	116-2201-15	1/4W 22 ohm
R329	117-1031-15	1/8W 10k ohm
R330	117-1031-15	1/8W 10k ohm
R331	117-1031-15	1/8W 10k ohm
R332	117-1031-15	1/8W 10k ohm
R333	117-4731-15	1/8W 47k ohm
R334	117-1021-15	1/8W 1k ohm
R335	117-1021-15	1/8W 1k ohm
R336	117-1021-15	1/8W 1k ohm
R337	117-1021-15	1/8W 1k ohm
R338	117-4711-15	1/8W 470 ohm
R501	117-2231-15	1/8W 22k ohm
R502	117-4711-15	1/8W 470 ohm
R503	116-1221-15	1/4W 1.2k ohm
R504	117-4731-15	1/8W 47k ohm
R507	116-1021-15	1/4W 1k ohm
R508	116-6801-15	1/4W 68 ohm
R801	117-4731-15	1/8W 47k ohm
R802	117-4721-15	1/8W 4.7k ohm
R803	117-4721-15	1/8W 4.7k ohm
R804	117-3331-15	1/8W 33k ohm
R805	117-3331-15	1/8W 33k ohm
RY801	014-0580-00	A 12W-K
RY802	014-0580-00	A 12W-K
T501	009-0618-01	CHOKE 1.2mH
X101	060-1042-00	CERA RESONATOR
PWB	039-3378-00	PWB(WITHOUT COMPONENT)

Clarion Co., Ltd.
7-2, Shintoshin, Chuo-ku, Saitama-shi, Saitama 330-0081 Japan
Service Dept.: 7-2, Shintoshin, Chuo-ku, Saitama-shi, Saitama 330-0081 Japan
Tel: +81-48-601-3705 FAX: +81-48-601-3804

Published by Service Dept.
5.2009
Printed in Japan

Service Manual

TAPE mechanism (GFN-LS)

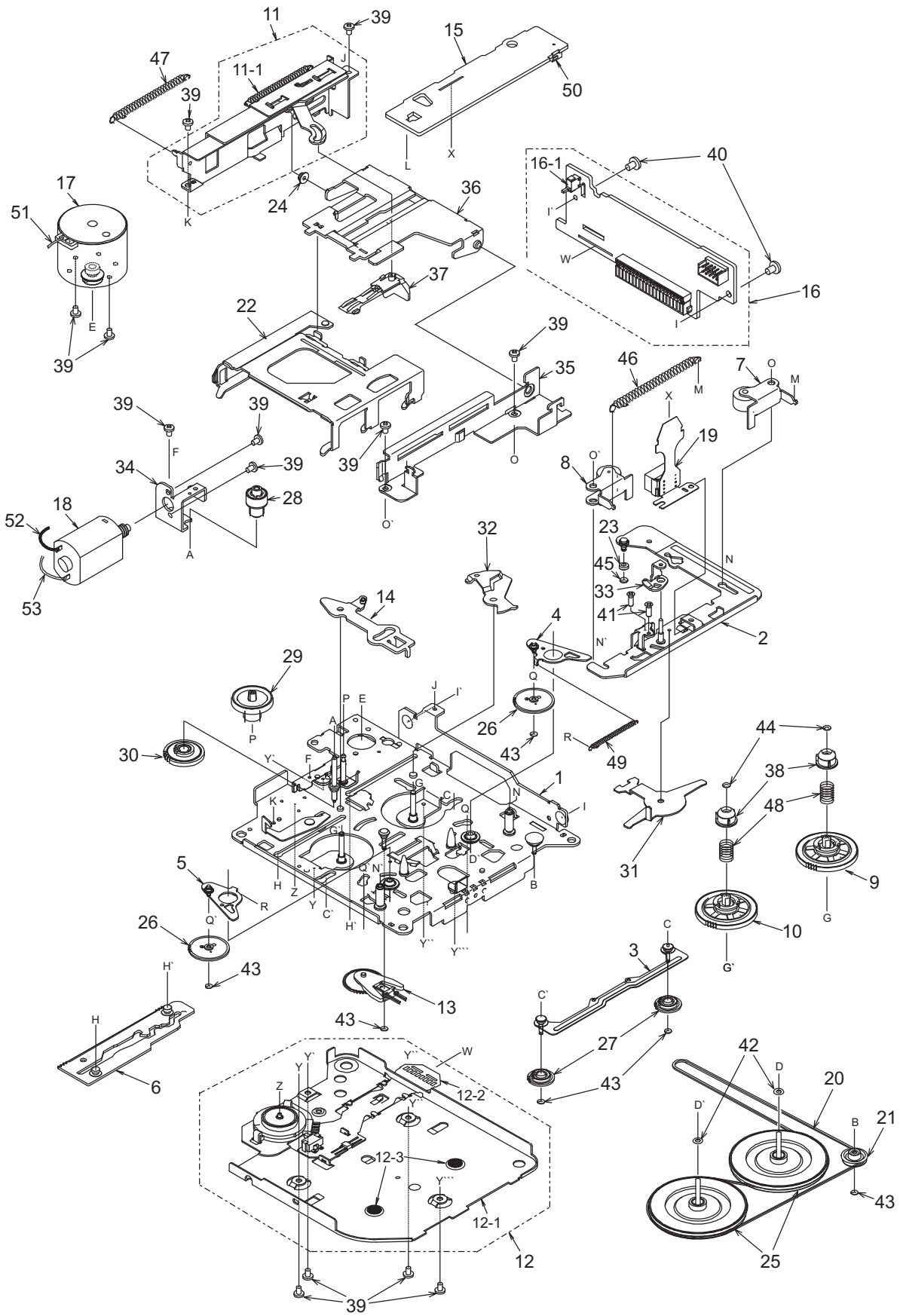
Model 930-0792-87

EXPLODED VIEW / PARTS LIST

* Exploded view on next page.

NO.	PART NO.	DESCRIPTION	Q'TY
1	960-4294-22	DECK PLATE ASSY	
2	960-4261-20	HEAD PLATE ASSY	
3	960-4262-03	FF/REW-P ASSY	1
4	960-4263-03	IDLER-P ASSY F	1
5	960-4264-03	IDLER-P-ASSY R	1
6	960-4266-20	MODE PLATE ASSY	
7	960-4269-05	ROLLER ASSY F	1
8	960-4270-05	ROLLER ASSY R	1
9	960-4348-03	REEL ASSY F	1
10	960-4349-03	REEL ASSY R	1
11	960-4389-20	EJECT SUB ASSY	1
11-1	750-3020-01	SW PLATE SPRING	1
12	960-4338-09	BOTTOM SUB ASSY	1
12-1	960-4295-02	BOTTOM P-ASSY	1
12-2	----------	BOTTOM PWB (WITHOUT COMPONENT)	1
12-3	746-0767-00	SP-WASHER	2
13	960-4282-06	DETECT SUB ASSY	1
14	960-4301-02	PLAY LINK ASSY	1
15	----------	SIDE PWB (WITHOUT COMPONENT)	1
16	990-0713-90	REAR PWB (WITHOUT COMPONENT)	1
16-1	013-3906-00	SWITCH (TAPE IN)	1
17	SMA-168-100	MAIN MOTOR ASSY	1
18	SMA-169-100	POWER ASSY	1
19	011-0328-01	HEAD	1
20	602-0118-00	BELT	1
21	604-0046-00	TENSION PULLEY	1
22	606-0093-07	PACK GUIDE	1
23	610-0342-01	HEAD P ROLLER	1
24	610-0343-00	GUIDE A ROLLER	1

NO.	PART NO.	DESCRIPTION	Q'TY
25	611-0091-03	FLYWHEEL	2
26	613-0662-00	IDLER GEAR	2
27	613-0286-03	FF/REW GEAR	2
28	613-0288-01	HELICAL	1
29	613-0289-01	GEAR A	1
30	613-0337-20	POWER GEAR	1
31	630-2597-01	CHANGE LINK	1
32	630-2598-05	EJECT LINK	1
33	630-2600-01	ADJUST LINK	1
34	630-2601-02	MOTOR PLATE	1
35	630-2626-06	PWB FRAME	1
36	630-2642-01	GUIDE ARM	1
37	631-1992-02	PACK STOPPER	1
38	631-1993-01	SLIDE BUSH	2
39	716-0484-03	SCREW (M2x2.5)	13
40	716-1676-50	PWB SCREW(M2.6x6)	2
41	716-0833-10	AZIMUTH SCREW(M2x5.6)	2
42	746-0624-00	SP-WASHER	2
43	746-0724-00	SP-WASHER	6
44	746-0761-00	SP-WASHER	2
45	746-0762-00	SP-WASHER	1
46	750-2946-02	PINCH SPRING	1
47	750-2947-25	EJECT P SPRING	1
48	750-2949-00	SLIDE SPRING	2
49	750-3017-02	IDLER P SPRING	1
50	074-0898-10	SOKET(10P)	1
51	802-4909-60	VINYL COAT WIRE(RED)	1
52	806-4914-60	VINYL COAT WIRE(BLUE)	1
53	816-2349-00	SPECIAL LEAD(WHITE)	


11
39
15
47
11-1
J
50
39
L
X
K
40
16-1
17
24
36
I`
51
W
16
37
I
22
39
46
7
O
M
35
X
M
39
39
19
F
O`
8
34
39
O
39
O`
18
28
52
32
23
45
N
A
33
53
14
41
4
N`
2
29
Q
P
J
I`
26
P
E
43
R
49
44
30
A
Y`
F
B
38
1
G
C
N
I
48
K
Q
31
5
H
Z
Y
C`
H`
Y``
Y```
B
9
R
D`
10
26
Q`
G
G`
3
C
H`
43
13
C`
H
27
43
43
6
42
W
Y`
D
Y`
20
12-2
Z
D`
B
21
Y
12-3
43
Y```
12-1
25
12
39

ELECTRICAL PARTS LIST

SIDE PWB(B1)section

REF No.	PART No.	DESCRIPTION
C1	178-5612-78	560pF
C2	178-5612-78	560pF
C3	178-5612-78	560pF
C4	178-5612-78	560pF
C5	172-1231-11	0.012uF
C6	172-1231-11	0.012uF
C7	172-4731-11	0.047uF
C8	172-4731-11	0.047uF
C9	188-1053-68	50V 1uF
C10	178-5612-78	560pF
C11	178-5612-78	560pF
C12	178-1042-78	0.1uF
C13	178-1042-78	0.1uF
C14	178-4722-78	4700pF
C15	188-2263-38	16V 22uF
C16	178-1032-78	0.01uF
C17	188-1043-68	50V 0.1uF
C18	188-4753-58	35V 4.7uF

REF No.	PART No.	DESCRIPTION
C20	176-2201-50	22pF CH
C21	176-2201-50	22pF CH
C22	176-2201-50	22pF CH
C23	176-2201-50	22pF CH
IC1	051-1777-00	HA12163
L1	010-2198-76	0.047uH
L2	010-2198-76	0.047uH
P4	074-0898-10	10P
R1	117-2731-15	1/8W 27k ohm
R2	117-2731-15	1/8W 27k ohm
R3	117-2731-15	1/8W 27k ohm
R4	117-2731-15	1/8W 27k ohm
R5	117-1811-15	1/8W 180 ohm
R6	117-1811-15	1/8W 180 ohm
R7	117-3341-15	1/8W 330k ohm
R8	117-3341-15	1/8W 330k ohm
R9	117-1131-15	1/8W 11k ohm
R10	117-1131-15	1/8W 11k ohm

REF No.	PART No.	DESCRIPTION
R11	117-1531-15	1/8W 15k ohm
R12	117-1531-15	1/8W 15k ohm
R13	032-0098-93	1/8W 18k ohm G
R14	117-3331-15	1/8W 33k ohm
R15	117-1831-15	1/8W 18k ohm
R16	117-1841-15	1/8W 180k ohm
R17	117-4731-15	1/8W 47k ohm
R18	117-1241-15	1/8W 120k ohm
R19	117-2231-15	1/8W 22k ohm
R20	117-2231-15	1/8W 22k ohm
R21	117-2231-15	1/8W 22k ohm
R22	117-1031-15	1/8W 10k ohm
R23	117-2231-15	1/8W 22k ohm
VR1	012-4431-06	10k ohm
VR2	012-4431-06	10k ohm
PWB	039-1436-20	PWB(WITHOUT COMPONENT)

BOTT0M PWB(B2)section

REF No.	PART No.	DESCRIPTION
IC2	051-1776-00	NJL5801K
SW1	013-3953-01	METAL SWITCH
SW2	013-3951-32	MODE SWITCH
PWB	099-9926-01	PWB(WITHOUT COMPONENT)

REAR PWB(B3)section

REF No.	PART No.	DESCRIPTION
P5	076-0368-10	10P
P6	074-1104-20	20P
R24	111-5611-91	1/4WS 560 ohm
SW3	013-3906-00	SPPB51
PWB	990-0713-90	PWB(WITHOUT COMPONENT)

CIRCUIT DIAGRAM

SIDE PWB (B1) /BOTTOM PWB (B2) /REAR PWB (B3)section

