PARTS LIST

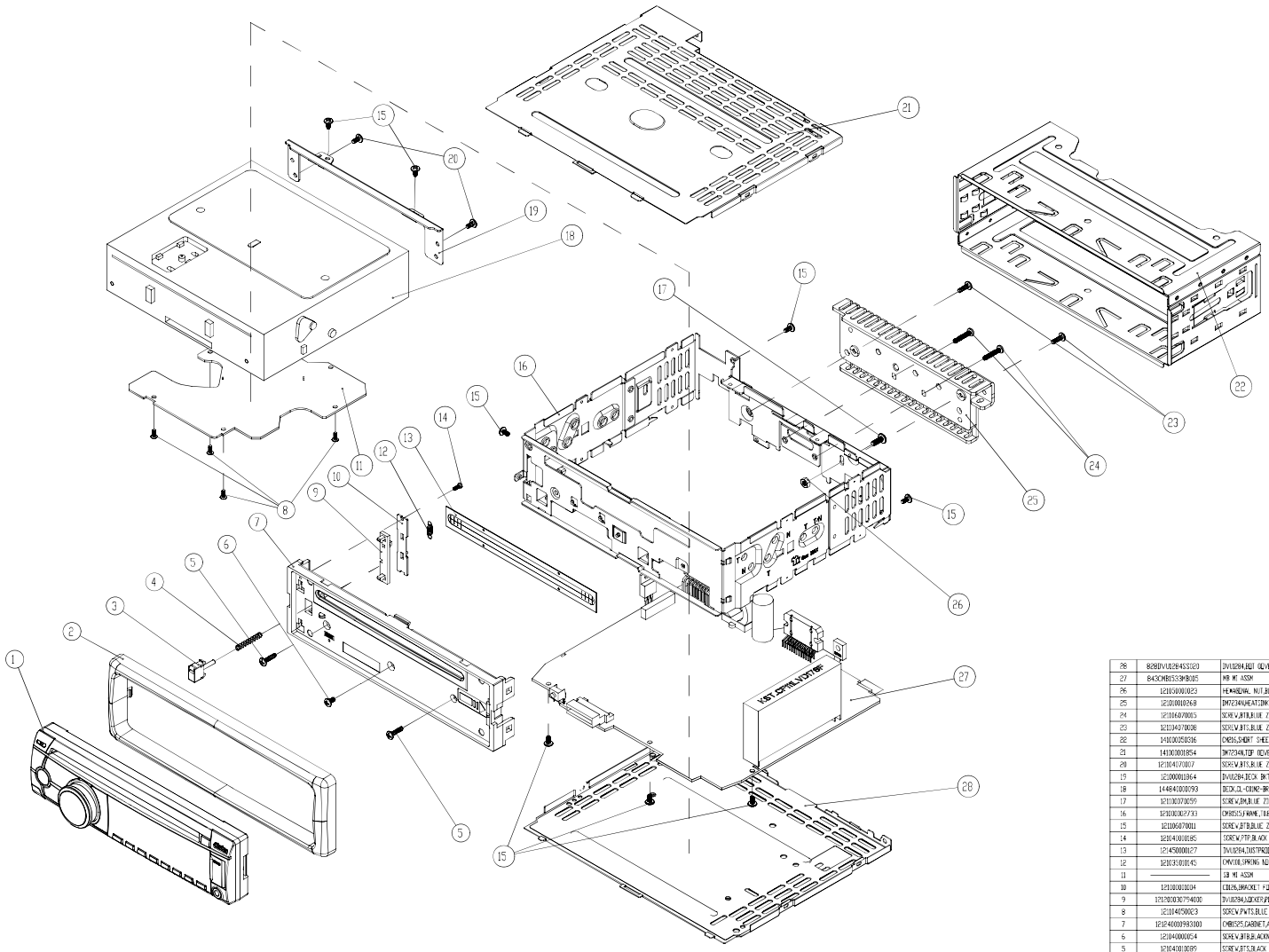
Quotation of assembly parts for CZ302

Updated: 10rd, FEB 2012

NO.	Clarion Model	Part NO #	Qty	MOQ	Description	Lead time(day)	Assembly parts Picture
1	9482CMB1533194A	843CMB1533MB004	1	30	CMB1533 MB MI	TBC	
2	9482CMB1533194A	843CMB1533SB004	1	30	CMB1533 SB MI	TBC	
3	9482CMB1533194A	143830001236	1	30	I/O,CM1511,15P,130MM	TBC	
4	9482CMB1533194A	843CMB1533KB002	1	30	CMB1533 KB MI	TBC	
5	9482CMB1533194A	121270000500000	1	30	Outter Escutcheon	TBC	
6	9482CMB1533194A	828DVU1284SS020	1	30	Lower Cover	TBC	
7	9482CMB1533194A	141000001854	1	30	Upper Cover (Mountain Bracket)	TBC	
8	9482CMB1533194A	845CMU1522SA000	1	30	Inner Escutcheon Assy	TBC	
9	9482CMB1533194A	123830001328	1	30	SIRIUS輸出終	TBC	
10	9482CMB1533194A	123830001430	1	30	WIRE HARNES	TBC	
11	9482CMB1533194A	141045000200	2	200	Lock Screw	*TBC*	
12	9482CMB1533194A	121090000327	2	200	L-KEY	TBC	
13	9482CMB1533194A	843CM1521RMT000	1	30	REMOTE CONTROL	TBC	

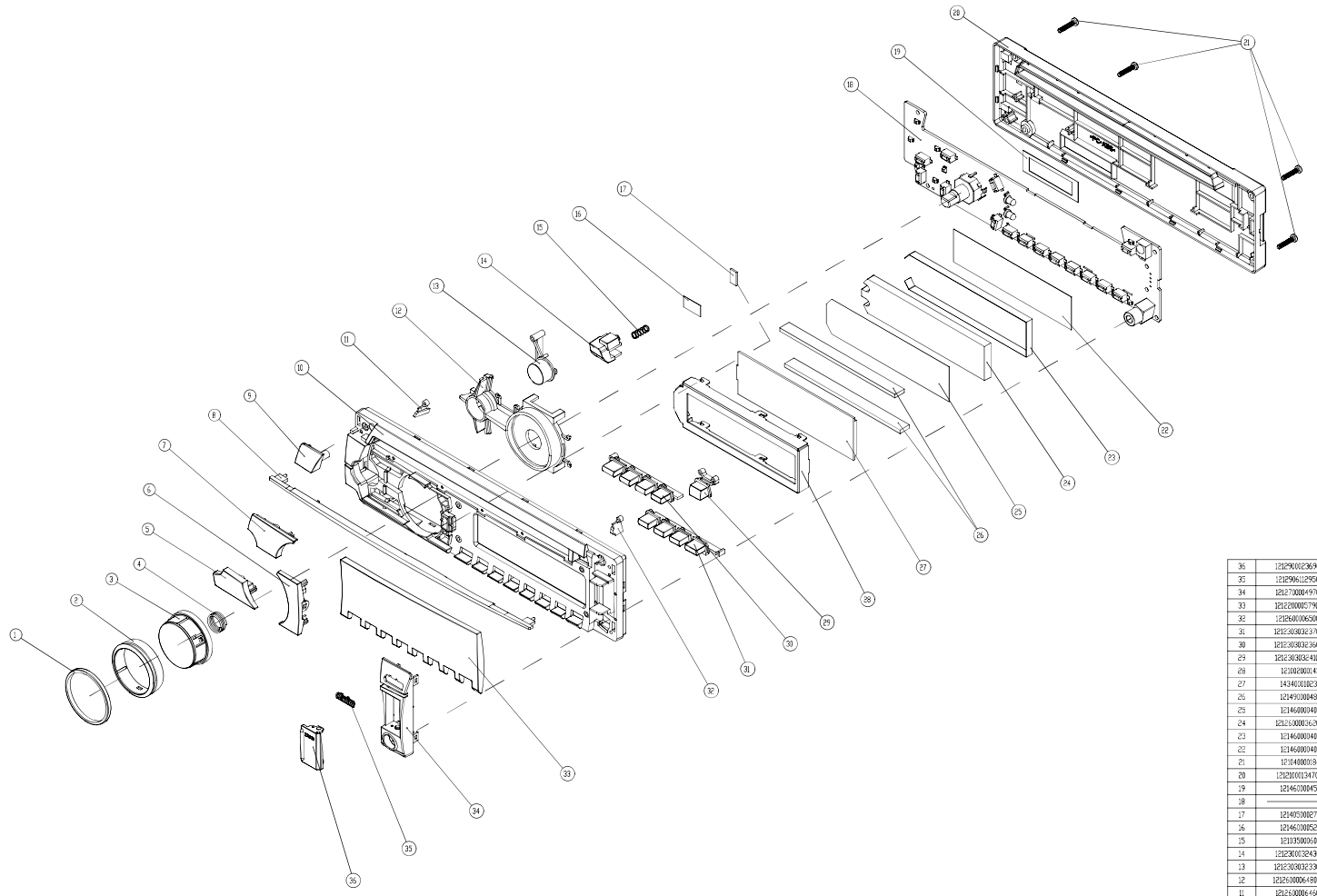
EXPLODED VIEW / PARTS LIST

Main section



Item	Assembly Part No.	Description(English)	QTY	Remark
28	828DVU1284SSI20	DVU1284,BUT COVER+INSULATING,ASSM 1	1	
27	843CMB1533KB005	MB MT ASSM	1	
26	121036000023	HEX&SEAL NUT,BLUE ZINC,M3*2.5,	1	
25	121000102691	DVT2134N,HEATSINK,AL	1	
24	121064700015	SCREW,BTB,BLUE ZINC,M2.6*4	2	
23	121104700038	SCREW,BTS,BLUE ZINC,M2.6*8	2	
22	141003050316	CMB16,SHORT SHEET,SECC,T0.5	1	
21	141003001854	DVT2134N,TOP COVER,SECC,T0.5	1	
20	121104770017	SCREW,BTS,BLUE ZINC,M2.6*5	2	
19	121000001864	DVU1284,DECK BKT BACK,SECC,T1.0	1	
18	144841000193	DECK,CL-CDUNO-BR,SUNAA,JVC7068	1	
17	121100770299	SCREW,DW,BLUE ZINC,M3*8	1	
16	121000002733	CMB1515,FRAME,TAB,SPK,PASSIVE,SSIVE DIE	1	
15	121106870011	SCREW,BTB,BLUE ZINC,M2.6*5	8	
14	121040000195	SCREW,PTP,BLACK ZINC,M2*5	1	
13	121450000127	DVU1284,DUSTPROOF CLOTH DISK,HYMERON	1	
12	121035000145	CMV1108,SPRING NECK RETTEM,PWR,*0.3	1	
11	————	SB MT ASSM	1	
10	121000010694	CDU26,BRACKET FOR NECK,SECC,T1.0	1	
9	121200307940X0	DVU1284,LOCKER,PDM	1	
8	121104150023	SCREW,PWTS,BLUE ZINC,M2*5	4	
7	121240000983100	CMB1525,CABINET,ABS	1	
6	121040000054	SCREW,BTB,BLACK ZINC,M3.6*5	1	
5	121040000699	SCREW,BTS,BLACK ZINC,M2.6*10	2	
4	121035000364	CDU26,SPRING FOR OPEN CAP,PWR,*0.3	1	
3	141290208480000	CDU26,CAP OPEN,PDM	1	
2	121270000500000	CMB1535,TRIM PLATE,ABS	1	
1	843CMB1533KB003	KB MT ASSM	1	

Panel section



Item	Assembly Part No.	Description(English)	QTY	Remark
36	12129000236900	CMU532,USB COVER,PC	1	
35	12129961129501	DM75,BRAND BADGE,ABS,BRZ+SIL,CLARION	1	
34	12127000497000	CMB1533,R DECO BLOCK,PC	1	
33	12122000579078	CMB1533194A,LENS,PMMA,BLK	1	
32	12126000650000	CMB531,R COM LI-GUIDE,PC	1	
31	12123030323028	CMB1533194A,NUMBER BUTTON 2,PC,GEN+BLK	1	
30	12123030236028	CMB1533194A,NUMBER BUTTON 1PC,GEN+BLK	1	
29	12123030324028	CMB1533194A,EJECT BUTTON,PC,GEN+BLK	1	
28	12102000143	CMB1515,LCD COVER,SPTE,T0.5	1	
27	14340010234	LCD,CZ702,VA,NEGATIVE,BLACK-MASK	1	
26	12149000489	CMB1515,ZEBRA STRIP,7.5*2*6	2	
25	12146000484	CMB1515,FILTER SHEET,PC,T0.15	1	
24	12126000362000	CMB1515,LCD LI-GUIDE,PMMA	1	
23	12146000487	CMB1515,LI-SHIELD SHEET,TIN FOIL,T0.15	1	
22	12146000495	CMB1515,LCD B-LIGHT SHEET,PC,T0.15	1	
21	12104000184	SCREW,PTP,BLACK ZINC,M2*10	4	
20	12120001347000	CMB531,REAR PANEL,ABS	1	
19	12146000453	CMB1525,INSULATING SHEET,PC,T0.2	1	
18	————	CMB1533 KB SMT ASSM	1	
17	12140500082?2	CMB531,SHADE SPONGE,EVA,7.5W*0.9	1	
16	12146000524	CMB1533,LI-GUIDE FILTER SHEET,MYLAR T0.1	1	
15	12103500605	CMV129,SPRING FOR OPEN,PWR,W0.25	1	
14	12123030324000	CMB531,REL BUTTON,PC	1	
13	12123030323028	CMB1533194A,SRC BUTTON,PC,GEN+BLK	1	
12	12126000648000	CMB531,LI-GUIDE,PC	1	
11	12126000646000	CMB531,L COM LI-GUIDE,PC	1	
10	12120001348000	CMB531,FRONT PANEL,PC	1	
9	12127000501000	CMB1533,L DECO BLOCK,PC	1	
8	14127050502037	CMB1533194A,DECO BAR,ABS,PLT+SIL	1	
7	12123030238028	CMB1533194A,BAND/MENU BUTTON,PC,GEN+BLK	1	
6	12123030323028	CMB1533194A,PS AS BUTTON,PC,GEN+BLK	1	
5	12123030234028	CMB1533194A,VOL/PWR BUTTON,PC,GEN+BLK	1	
4	12103500569	CMV129,SPRING FOR VOL KNOB/PWR,W0.7	1	
3	12129000237000	CMB531,KNOB BASE,PC	1	
2	14123050324077	CMB1533194A,VOL KNOB,ABS,PLT+SIL	1	
1	12149000726000	CMB31,RUBBER RING,RUBBER	1	