Cosmetic Spec

Version	Change number	Changes that	Change date

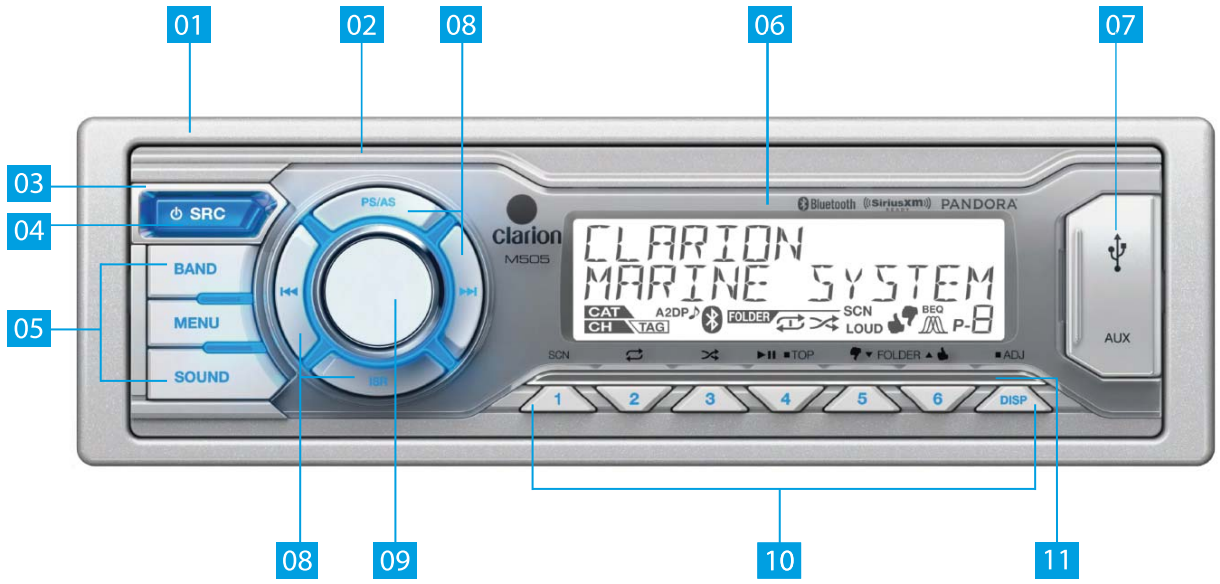

Parts List

#	Part	Material	Added finish	Details/finish/inmould	Surface	Remarks	Ver.
01	Outer-Trim	ABS	Painting	White silver(PT-877C)	--	--	0.1
02	Escutcheon	ABS	Painting	White silver(PT-877C)	--	--	0.1
03	Button Trim	ABS	Painting	Chrome	High Gloss	--	0.1
04	SRC Button	ABS	Material finish	Dark Blue(PT-632C)	High Polish	--	0.1
05	Illumination Parts	Acryl	Material finish	Milky White	High Polish +Blast	--	0.1
06	Dial-CVR	Acryl	Material finish	Transparent	High Polish	--	0.1
	Logo/Letters	--	Front Printing Back Printing	Pantone 431C	--	--	0.1
	--	--	Back Printing	Pantone 877C(solid) +IR	--	--	0.1
07	USB Cover(Fornt)	ABS	Painting	White silver(PT-877C)	--	--	0.1
	USB Cover(Rear)	Elastomer	Material finish	PT-Cool Gray5	Minimum Blast	--	0.1
	Logo/Letter	--	Front Printing	Pantone 431C	--	--	0.1
08	Button	PC	Painting	White	High Gloss	--	0.1
09	Base	ABS	Painting	White	High Gloss	--	0.1
	Top Ring	ABS	Painting	Chrome	High Gloss	--	0.1
	Grip	Rubber	Material finish	Milky white	Minimum Blast	--	0.1
10	Button	PC	Painting	White	High Gloss	--	0.1
11	Doco-Bar	ABS	Painting	Chrome	High Gloss	--	0.1

Description			File name	Cosmetic Spec			
Author	Audit	Approve	Customer name	Clarion			
Ma	Linda	Kent	Model	M505			
2015.03.06	2015.03.06	2015.03.06					
SOUNDMAX Electronics Ltd.			File	File number	Pagination	Ver	Size
					1/1	1.0	A4

MARK	DATE	REVISION DESCRIPTION	REVISION
1			
2			

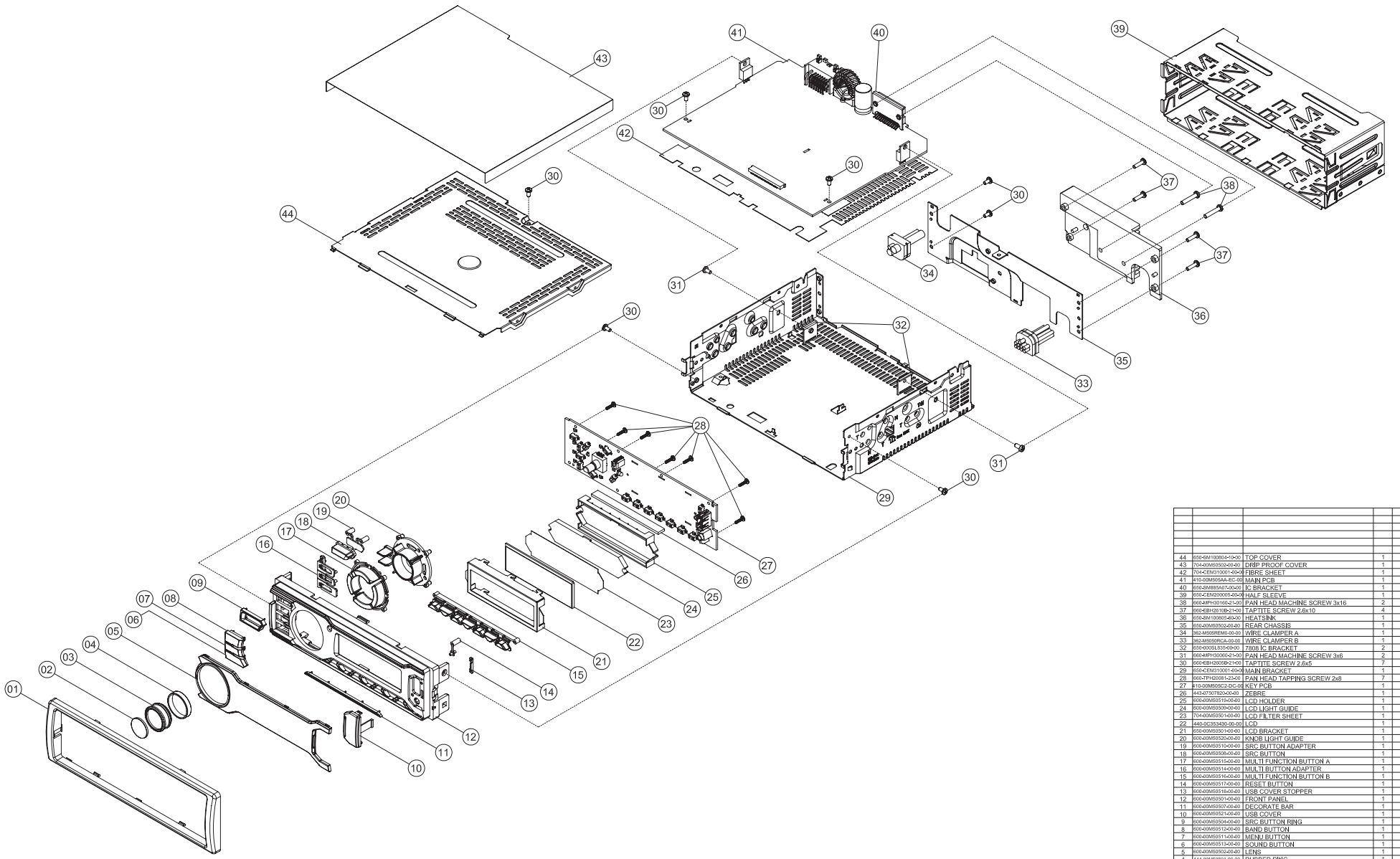

ITEM	PART NUMBER	PART NAME	QTY	REMARK
44	650-SM100804-10-00	TOP COVER	1	
43	704-00M50502-00-00	DRIP PROOF COVER	1	
42	704-CEM310001-00-00	FIBRE SHEET	1	
41	410-00M505AA-EC-00	MAIN PCB	1	
40	650-SM885A07-00-00	IC BRACKET	1	
39	650-CEM200005-00-00	HALF SLEEVE	1	
38	660-MPH30160-21-00	PAN HEAD MACHINE SCREW 3x16	2	
37	660-EBH2610B-21-00	TAPTITE SCREW 2.6x10	4	
36	650-SM100805-60-00	HEATSINK	1	
35	650-00M50502-00-00	REAR CHASSIS	1	
34	362-M505REM0-00-00	WIRE CLAMPER A	1	
33	362-M505RCA-00-00	WIRE CLAMPER B	1	
32	650-000SL835-00-00	7808 IC BRACKET	2	
31	660-MPH30060-21-00	PAN HEAD MACHINE SCREW 3x6	2	
30	660-EBH2605B-21-00	TAPTITE SCREW 2.6x5	7	
29	650-CEM310001-00-00	MAIN BRACKET	1	
28	660-TPH20081-23-00	PAN HEAD TAPPING SCREW 2x8	7	
27	410-00M505C2-DC-00	KEY PCB	1	
26	443-07507820-00-00	ZEBRE	1	
25	600-00M50519-00-00	LCD HOLDER	1	
24	600-00M50509-00-00	LCD LIGHT GUIDE	1	
23	704-00M50501-00-00	LCD FILTER SHEET	1	
22	440-0C353430-00-00	LCD	1	
21	650-00M50501-00-00	LCD BRACKET	1	
20	600-00M50520-00-00	KNOB LIGHT GUIDE	1	
19	600-00M50510-00-00	SRC BUTTON ADAPTER	1	
18	600-00M50508-00-00	SRC BUTTON	1	
17	600-00M50515-00-00	MULTI FUNCTION BUTTON A	1	
16	600-00M50514-00-00	MULTI BUTTON ADAPTER	1	
15	600-00M50516-00-00	MULTI FUNCTION BUTTON B	1	
14	600-00M50517-00-00	RESET BUTTON	1	
13	600-00M50518-00-00	USB COVER STOPPER	1	
12	600-00M50501-00-00	FRONT PANEL	1	
11	600-00M50507-00-00	DECORATE BAR	1	
10	600-00M50521-00-00	USB COVER	1	
9	600-00M50504-00-00	SRC BUTTON RING	1	
8	600-00M50512-00-00	BAND BUTTON	1	
7	600-00M50511-00-00	MENU BUTTON	1	
6	600-00M50513-00-00	SOUND BUTTON	1	
5	600-00M50502-00-00	LENS	1	
4	444-00M50501-00-00	RUBBER RING	1	
3	600-00M50505-00-00	ROTARY KNOB	1	
2	600-00M50506-00-00	KNOB COVER	1	
1	600-00M50503-01-00	TRIM PLATE	1	

SOUNDMAX® Electronics Limited

PART NO.		MODEL NO.	M505	PROJECTION	
NAME	EXPLODE DRAWING	UNIT	MM	SCALE	NO SCALE
		MATERIAL		PARTICULAR	
DESIGNED	Zhang Jan 21, 2016	GENERAL TOLERANCES	0 ± 0.5 ±0.05	QTY	1
CHECKED			30 ± 0.5 ± 0.05	VERSION	A
APPROVED			120 ± 0.5 ±0.05	SHEET	1 OF 1

DWG FILE NAME:

SOUNDMAX Electronic Co. Ltd
物料清单列表 (00M505-CN8631-01-0U 版本 15)
CLARION M505 AM/FM,BT+WB/USB+(NO SD)+SIRIUS/XM,(ELV)
Illu Blue,2RCA,iPhone(3959),E2PROM,USA,(M505)
CAR RADIO UNIT
生产于 : 参考编号:
每 1 PC 更新于 2014-12-8 14:07:24 产品设计阶段: 1; 阶段更新日期: 2014-12-8 14:07:24; 设计备注:

	货品编号	名称	数量	单位	位置/备注
1-------	190-00M505-00-T1	Main Board(1/1) - (M505)- AM/FM/WB/USB+SIRIUS/XM_(ROHS) - TB2938HQ(4X41W),W/E2PROM,BT(CW51)_iPod(3959)	1	PC	
-2------	001-0000M505-00-S0	AP8064 32Bit SOC DSP, M505/M205 LQFP-64	1	PC	IC204,
-2------	001-0074HC32-00-00	Integrated Circuit 74HC32,Quad 2-input OR Gate 集成电路 74HC32	1	PC	IC705,
-2------	001-00AP1117-33-00	VOL. REGULATOR IC AP1117 3.3V SOT223-3L OUTPUT=3.3V+/-0.2% 1A 稳压IC AP1117 3.3V SOT223 -3L 输出电压 3.3V+/-0.2% 1A, Replace: 001-00CP1117-33-00	2	PC	IC101,IC701,
-2------	001-00AP1509-00-00	DC/DC Converter IC AP1509-SL-13 封装：SOP-8L 集成电路 AP1509-SL-13 最大电流输出：2A 工作电压：4.5Vto22V 储存温度：-65℃~150℃	1	PC	IC304,
-2------	001-00W25Q32-00-00	32M FLASH MEMORY IC,W25Q32BVSIG 封装:8-pin SOIC 208-mil,供应商：Winbond 集成电路W25Q32BVSIG 闪存IC 32M-bit 封装:8-pin SOIC 208-mil 型号：W25Q32BVS 牌子：Winbond	1	PC	IC203,
-2------	001-00YD2792-00-00	Integrated Circuit, YD2792 TSSOP20 Amp 运放IC YD2792 封装：TSSOP20, 工作电压：6-11v;友达公司 YD2792是一块具有自举功能的四通道音频放大电路，该	2	PC	IC401,IC403,

		电路主要用于汽车音响系统。 该电路特点如下： 工作电压范围6-11V； 静态工作电流14mA； 输出电压14VVpp（VCC=9V）； 最大电压输出有效值为4.5V（f=100kHz）； 电源纹波抑制比为50dB； 总谐波失真为0.003%； 噪声输出电压为5μV； 采用TSSOP20封装形式。		
-2------	001-0LM2950L-60-00	Integrated Circuit LM2950L-3.3, Voltage Regultor TO-92 Package,Tape-Mount 3.3V稳压IC，Brand: HTC 编带包装	2 PC	IC202,IC100,
-2------	001-0M505MCU-00-S0	M505/M205 MCU,STM8S005K6 BY SMX	1 PC	IC201,
-2------	001-0NJM4558-00-00	Integrated Circuit,NJM4558 SOP-8 Op Amp	2 PC	IC415,IC708,
-2------	001-0UTC7808-00-00	Integrated Circuit UTC7808,8V 1.5A TO-220 YOUWANG CO.LTD 集成电路,三端稳压IC UTC7808, 8V 1A TO-220, 牌子:YOUWANG CO.LTD Replace: 001-00LS7808-00-00	1 PC	IC410,
-2------	001-0UTC7809-00-00	Integrated Circuit UTC7809,9V 1.5A TO-220 YOUWANG CO.LTD 集成电路,三端稳压IC UTC7809, 9V 1A 封装 TO-220, 牌子:YOUWANG CO.LTD,	1 PC	IC104,
-2------	001-337S3959-01-T0	iPod Authentication Coprocessor 2.0C IC,MODEL:MFI337S3959-01.Size:2.5 mmx2.5mm iPod认证处理IC,型号：MFI337S3959-01, 尺寸：2.5 mm x 2.5 mm,封装：PG-USON-8-1	1 PC	IC205,
-2------	001-CYT78L05-TA-00	Integrated Circuit CYT78L05, 5V +/-4% Ipk=150mA Regulator,TO-92,Tape-Mount	2 PC	IC703,IC704,
-2------	001-FT24C32A-00-00	Integrated Circuit ,FT24C32A SOP-8, 4096X8 (32K) -byte serial EEPROM,	1 PC	IC207,

	集成电路 FL24C32A 封装:SOP-8 EEPROM, GM-Electronics		
-2------ 001-0T235000-00-00	Integrated Circuit 0T2350,7-ch Input 电子VOL IC，0T2350，7路信号输入。 供货商：元泰积体电路股份有限公司, 封装：48pin,LQFP,7mm x 7mm, 电压范围：5V to 10V,推荐8V，电流MAX：46mA，正常40mA，Oouput Load resistance=10KΩ, 输入阻抗MAX=65KΩ,Min=40KΩ,正常=50KΩ, 增益：MAX=17dB，Min=13dB,正常=15dB,	1 PC	IC402,
-2------ 001-TB2938HQ-00-00	Integrated Circuit,TOSHIBA TB2938HQ,4X41W Power Amplifier, 东芝TB2938HQ	1 PC	IC501,
-2------ 006-0008050D-01-00	Transistor 8050D TO-92 HFE=150~300 Tape-Mount 三极管 8050D TO-92 HFE=150~300 编带包装	1 PC	Q204,
-2------ 006-0008550D-01-00	Ai Transistor 8550D TO-92 HFE=150~300 Tape-Mount 三极管 8550D TO-92 HFE=150~300 编带包装	1 PC	Q200,
-2------ 006-002SB772-0P-20	Transistor,2SB772K,PNP Power Transistor TO-126 HFE=160~320 Right Way 三极管 2SB772K,PNP TO-126 HFE=160~320 确达公司	5 PC	Q203,Q301,Q304,Q306, Q308,
-2------ 007-00S9014S-00-00	Transistor S9014S,Package SOT-23, HFE=300~400 3K/REEL SMD三极管S9014S 3K/REEL	15 PC	Q415,Q416,Q417,Q418, Q419, Q420,Q501,Q705,Q707, Q301A, Q708,Q711,Q713, Q703,Q208,
-2------ 007-00S9014S-00-00	Transistor S9014S,Package SOT-23, HFE=300~400 3K/REEL	13 PC	Q205,Q206,Q207,Q302, Q303,Q305,

		SMD三极管S9014S 3K/REEL		Q310,Q401,Q404,Q405, Q406,Q413, Q414,
-2------	007-S8550000-00-00	SMT Transistor S8550 ,Package SOT-23 hFE=H档200~350 SMT三极管S8550, 封装：SOT-23，hFE= H档200~350,2TY 代现用货号：007-0008050Y-00-00 其它指标: Pcm: 0.3W (tamp=25 C) Icm: 0.5A V(br)cbo: 40V	5 PC	Q202,Q709,Q712,Q402, Q403,
-2------	010-DMP3098L-00-00	MOSFET Transistor DMP3098L-7 SOT-23 -30V，-3.8A 场效应管DMP3098L-7 SOT-23 -30V，-3.8A，威斯迈供应	2 PC	Q706,Q710,
-2------	012-0603ESDA-09-00	SMT 0603ESDA-09，ESD 防静电管 ， < 比特> SMT ESD 防静电管 ,型号：0603ESDA-09 带装，电容容量：5P,适用于USB2.0 工作电压：9V，	6 PC	ZD603,ZD604,ZD207, ZD208, R248,R251,
-2------	013-0000SK24-00-00	SMT Diode SK24 贴片二极管 SK24 封装为 5 K/PACKAGE	1 PC	D302,
-2------	013-001N4148-02-10	SMT Diode 1N4148 LL-34 (SEMTECH Electronics.Ltd.)5K/PACKAGE 贴片二极管 1N4148,封装为LL-34	6 PC	D101,D102,D212,D701, D703,D708,
-2------	014-00500039-12-00	Zener Diode SMD 3.9V 0.5W +/-5% DL35 Tape-Binded DAIWA co.ltd 然纳二极管SMD,3.9V 0.5W,+/-5%,贴片带装 由DAIWA公司提供 2.5K /PACKAGE 代用：	1 PC	ZD706,

	014-00500039-11-00　　3.9V 0.5W,+/-2%,		
-2------	014-00500051-11-10	Zener Diode SMD 5V1　0.5W +/-5% -Dl35 Tape-Binded　2.5K/PACKAGE 然纳二极管SMD 5V1　0.5W +/-5% 贴片带装 2.5K/reel	6 PC ZD701,ZD702,ZD703, ZD705,　ZD101,ZD102,
-2------	014-00500056-11-00	Zener Diode　SMD 5.6V 0.5W +/-2% - DL35 Tape-Binded 2500/PACKAGE 然纳二极管SMD,5.6V 0.5W,+/-2% 贴片带装 2500 / PACKAGE	7 PC ZD206,ZD704,ZD708, ZD709, ZD710,ZD712,ZD713,
-2------	014-00500062-11-00	Zener Diode　SMD 6.2V 0.5W +/-2% SMA 403D-02 Tape-Binded 然纳二极管SMD,6.2V 0.5W,+/-2% 贴片带装	1 PC ZD215,
-2------	014-00500068-10-10	Zener Diode SMD 6.8V 0.5W +/-5% Mini-MELF (3.6 x 1.6mm) 然纳二极管SMD,6V8 0.5W,+/-5%,贴片带装, 尺寸3.6 x 1.6mm 代用: 014-00500068-10-00	1 PC ZD211,
-2------	014-00500091-01-00	Zener Diode 9.1V　0.5W +/-5% Tape-Mount　5K/PACKAGE 然纳二极管9.1V 0.5W,+/-5%,带装	1 PC ZD201,
-2------	014-01000300-00-00	Zener Diode 30V 1W +/-5% DO-41(GLASS) IN4751A, (Tape Mount) 然纳二极管 30V 1W +/-5% 封装DO-41(GLASS) (编带包装)	2 PC ZD212,ZD204,
-2------	016-001N4007-00-10	Rectifier 1N4007 (Tape-Mount) 整流子 1N4007　带装 深圳泰丰祥公司 REPLACE:016-001N4007-00-00	5 PC D201,D203,D402,D403, D709,
-2------	016-001N5407-00-00	Rectifier IN5407 3A Peak forward current Reverse Voltage：800 Volts IN5407 3A,反向电压:800V,HK骏利贸易公司	1 PC D301,

	储存温度：-65℃ to 175℃ BY Team Force 代用：016-001N5401-00-00 联科订料			
-2------ 016-0B5819WS-00-00	Rectifier B5819WS 整流子,型号：B5819WS, 封装：SOD-323	3 PC		D202,D705,D706,
-2------ 018-001N4007-00-00	Rectifier SMD M7 1.0A/1000V DO-214AC (SMA) SMD 贴片整流二极管，型号：M7, 1.0A/1000V	3 PC		D305,D702,D704,
-2------ 058-00340000-00-00	Chip Resistor (0603) 0 Ohm (Jumper wire) 1A (Only accept <0.05 Ohm tolerance) 贴片电阻(0603) 0 Ohm (Jumper wire) 1A (只能接受少於0.5欧误差)	8 PC		L208,L209,R293,R526, RA404,RA405,R620,R621,
-2------ 058-00341470-00-00	Chip Resistor (0603) 4.7Ohm 1/10W +/-5% 贴片电阻(0603) 4.7 Ohm 1/10W +/-5%	2 PC		R402F,R468,
-2------ 058-00342100-00-00	Chip Resistor (0603) 10 Ohm 1/10W +/-5% 贴片电阻(0603)10 Ohm 1/10W +/-5%	5 PC		R401G,R715,R716,R717,R772,
-2------ 058-00342330-00-00	Chip Resistor (0603) 33 Ohm 1/10W +/-5% 贴片电阻(0603) 33 Ohm 1/10W +/-5%	2 PC		R214,R216,
-2------ 058-00343100-00-00	Chip Resistor (0603) 100 Ohm 1/10W +/-5% 贴片电阻 (0603) 100 Ohm 1/10W +/-5%	8 PC		R209,R223,R224,R235, R415,R434,R701,R706,
-2------ 058-00343220-00-00	Chip Resistor (0603) 220 Ohm 1/10W +/-5% 贴片电阻 (0603) 220 Ohm 1/10W +/-5%	10 PC		R412,R413,R421,R424,R425, R427,R480,R482,R483,R486,
-2------ 058-00343220-00-00	Chip Resistor (0603) 220 Ohm 1/10W +/-5% 贴片电阻 (0603) 220 Ohm 1/10W +/-5%	2 PC		R107,R204,
-2------ 058-00343470-00-00	Chip Resistor (0603) 470 Ohm 1/10W +/-5% 贴片电阻 (0603) 470 Ohm 1/10W +/-5%	3 PC		R290,R291,R401J,
-2------ 058-00343560-00-00	Chip Resistor(0603) 560 Ohm 1/10W +/-5% 贴片电阻 (0603) 560 Ohm 1/10W +/-5%	1 PC		RL101,
-2------ 058-00343680-00-00	Chip Resistor(0603)680 Ohm 1/10W +/-5% 贴片电阻 (0603) 680 Ohm 1/10W +/-5%	16 PC		R401M,R401N,R418,R422,R423, R426,R430,R435,R462,R463,R479, R481,R484,R485,R487,R489,

-2------	058-00344100-00-00	Chip Resistor (0603) 1K Ohm 1/10W +/-5% 贴片电阻 (0603) 1K Ohm 1/10W +/-5% 1K	17 PC	R420,R440,R459,R497,R501, R514,R516,R517,R518,R519, R528,R702,R733,R754,R779, R222, R719,
-2------	058-00344100-00-00	Chip Resistor (0603) 1K Ohm 1/10W +/-5% 贴片电阻 (0603) 1K Ohm 1/10W +/-5% 1K	16 PC	R101,R102,R103,R206, R207,R208,R210,R217,R221, R228,R239,R304,R343,R419. R237, R238,
-2------	058-00344120-00-00	Chip Resistor (0603)1.2K Ohm 1/10W +/-5% 贴片电阻 (0603) 1.2K Ohm 1/10W +/-5%	2 PC	R410,R437,
-2------	058-00344150-00-00	Chip Resistor(0603)1.5K Ohm 1/10W +/-5% 贴片电阻 (0603) 1.5K Ohm 1/10W +/-5%	2 PC	R323,R505,
-2------	058-00344220-00-00	Chip Resistor(0603) 2.2K Ohm 1/10W +/-5% 贴片电阻 (0603) 2.2K Ohm 1/10W +/-5%	13 PC	R439,R445,R475,R476,R477, R478,R705,R760,R767, R768,R769,R770,R304A,
-2------	058-00344220-00-00	Chip Resistor(0603) 2.2K Ohm 1/10W +/-5% 贴片电阻 (0603) 2.2K Ohm 1/10W +/-5%	12 PC	R106,R249,R340,R401P,R402P, R402Q,R402R,R402S,R417,R428, R429,R436,
-2------	058-00344270-00-00	Chip Resistor(0603) 2.7K Ohm 1/10W +/-5% 贴片电阻 (0603) 2.7K Ohm 1/10W +/-5%	2 PC	R406,R407,
-2------	058-00344330-00-00	Chip Resistor(0603) 3.3K Ohm 1/10W +/-5% 贴片电阻 (0603) 3.3K Ohm 1/10W +/-5%	7 PC	R231,R303,R404,R405,R707, R708, R709,
-2------	058-00344470-00-00	Chip Resistor(0603) 4.7K Ohm 1/10W +/-5% 贴片电阻 (0603) 4.7K Ohm 1/10W +/-5% 4K7	12 PC	R109,R218,R453,R454,R498, R499,R510,R511,R722, R734,R735,R738,
-2------	058-00344510-00-00	Chip Resistor(0603) 5.1K Ohm 1/10W +/-5% 贴片电阻 (0603) 5.1K Ohm 1/10W +/-5%	1 PC	R741,
-2------	058-00344820-00-00	Chip Resistor(0603) 8.2K Ohm 1/10W +/-5% 贴片电阻 (0603) 8.2K Ohm 1/10W +/-5%	2 PC	R471,R496,
-2------	058-00344910-00-00	Chip Resistor (0603)9.1K Ohm 1/10W +/-5%	2 PC	

	贴片电阻 (0603) 9.1K Ohm 1/10W +/-5%		R321,R322,
-2------ 058-00345100-00-00	Chip Resistor (0603) 10K Ohm 1/10W +/-5% 贴片电阻(0603) 10K Ohm 1/10W +/5% 10K	18 PC	R305,R310,R325,R401D,R401F, R401K,R401L,R503,R718, R745,R746, R756,R761,R762, R763,R764,R242, R219,
-2------ 058-00345100-00-00	Chip Resistor (0603) 10K Ohm 1/10W +/-5% 贴片电阻(0603) 10K Ohm 1/10W +/5% 10K	17 PC	R202,R205,R732,R416A, R226,R227,R229,R246,R416B, R252,R260,R261,R262,R263, R266, R729,R731,
-2------ 058-00345150-00-00	Chip Resistor (0603) 15K Ohm 1/10W +/-5% 贴片电阻(0603)15K Ohm 1/10W +/-5%	2 PC	R736,R737,
-2------ 058-00345180-00-00	Chip Resistor (0603) 18K Ohm 1/10W +/-5% 贴片电阻(0603) 18K Ohm 1/10W +/-5%	2 PC	R211,R212,
-2------ 058-00345220-00-00	Chip Resistor (0603) 22K Ohm 1/10W +/-5% 贴片电阻(0603) 22K Ohm 1/10W +/-5%	14 PC	R452,R455,R456,R457,R458,R465, R473,R474,R723,R739,R753,R100, R758,R342A,
-2------ 058-00345220-00-00	Chip Resistor (0603) 22K Ohm 1/10W +/-5% 贴片电阻(0603) 22K Ohm 1/10W +/-5%	13 PC	R220,R264,R308,R326,R342,R401, R402A,R402G,R402J,R402L,R411, R414,R450,
-2------ 058-00345300-00-00	Chip Resistor (0603) 30K Ohm 1/10W +/-5% 贴片电阻(0603) 30K Ohm 1/10W +/-5%	4 PC	R765,R771,R773,R774,
-2------ 058-00345330-00-00	Chip Resistop (0603) 33K Ohm 1/10W +/-5% 贴片电阻(0603) 33K Ohm 1/10W +/-5%	10 PC	R402C,R402K,R402N,R433,R441, R448,R451,R466,R472,R512,
-2------ 058-00345330-00-00	Chip Resistop (0603) 33K Ohm 1/10W +/-5% 贴片电阻(0603) 33K Ohm 1/10W +/-5%	9 PC	R302,R311,R401A,R401B, R401C,R401E,R401H,R401I,R402B,
-2------ 058-00345470-00-00	Chip Resistor (0603) 47K Ohm 1/10W +/-5% 贴片电阻(0603) 47K Ohm 1/10W +/-5% 47K	16 PC	R215,R312,R431,R432,R442, R443,R444,R446,R490,R491, R493, R495,R504,R730,R757, R110,
-2------ 058-00345560-00-00	Chip Resistor (0603) 56K Ohm 1/10W +/-5%	2 PC	

		贴片电阻(0603) 56K Ohm 1/10W +/-5%		R201,R265
-2------	058-00345680-00-00	Chip Resistor (0603) 68K Ohm 1/10W +/-5%	1 PC	
		贴片电阻(0603) 68K Ohm 1/10W +/-5%		R233,
-2------	058-00346100-00-00	Chip Resistor(0603) 100K Ohm 1/10W +/-5%	10 PC	
		贴片电阻(0603) 100K Ohm 1/10W +/-5%		R244,R402H,R447,R460,R464, R467,R492,R502,R704,R751,
-2------	058-00346150-00-00	Chip Resistor(0603) 150K Ohm 1/10W +/-5%	1 PC	
		贴片电阻(0603) 150K Ohm 1/10W +/-5%		R703,
-2------	058-00346220-00-00	Chip Resistor(0603) 220K Ohm 1/10W +/-5%	1 PC	
		贴片电阻(0603)220K Ohm 1/10W +/-5%		R752,
-2------	058-00346330-00-00	Chip Resistor(0603) 330K Ohm 1/10W +/-5%	1 PC	
		贴片电阻(0603) 330K Ohm 1/10W +/-5%		R250,
-2------	058-00346470-00-00	Chip Resistor(0603) 470K Ohm 1/10W +/-5%	2 PC	
		贴片电阻(0603) 470K Ohm 1/10W +/-5%		R408,R409,
-2------	058-00347100-00-00	Chip Resistor (0603) 1M Ohm 1/10W +/-5%	1 PC	
		贴片电阻(0603)1M Ohm 1/10W +/-5%		R710,
-2------	058-00444220-00-00	CHIP Resistor (0805) 2K2 Ohm 1/8W +/-5%	2 PC	
		表面钎接电阻 (0805) 2K2 Ohm 1/8W +/-5%		R341,R341A,
-2------	058-00445100-00-00	CHIP Resistor (0805) 10K Ohm 1/8W +/-5%	2 PC	
		表面钎接电阻 (0805) 10K Ohm 1/8W +/-5%		R234,R243,
-2------	058-00640000-00-00	Chip Resistor (1206) 0 Ohm 1/4W +/-5%	5 PC	
				PTC1,PTC4,R775,R240,D401,
-2------	058-00642470-00-00	Chip Resistor (1206) 47 Ohm 1/4W +/-5%	4 PC	
		贴片电阻(1206) 47 Ohm 1/4W +/-5%		R108,R232,R232A,R747,
-2------	058-00642910-00-00	Chip Resistor (1206) 91 Ohm 1/4W +/-5%	2 PC	
		贴片电阻(1206) 91 Ohm 1/4W +/-5%		R236,R236A,
-2------	058-00644220-00-00	Chip Resistor (1206) 2.2K Ohm 1/4W +/-5%	4 PC	
		贴片电阻(1206) 2K2 Ohm 1/4W +/-5%		R301,R306,R740,R759,
-2------	059-08203300-01-00	Resistor Network （0402）8pin 4X33 Ohm 1/10W +/-5%	2 PC	
		排阻 4个33 Ohm 电阻并联，封装：0402		R200,RN100,
-2------	108-10B3200B-M0-00	Chip Capacitor (0603) X7R 200pF 50V +/-20%	4 PC	
		贴片电容 (0603) X7R 200pF 50V +/-20%		C717,C718,C719,C720,
		FORMER NUMBER:106-350B3200-20-00		
-2------	108-10B4100B-K0-00	Chip Capacitor (0603) X7R 0.001uF 50V	16 PC	

		+/-10% 贴片电容 (0603) X7R 0.001uF 50V +/-10%			C215,C216,C217,C226,C227, C231,C238,C309,
			102		C404,C406,C407,C408,C441, C442,C443,C447,
-2------	108-10B4150B-K0-00	Chip Capacitor (0603) X7R 0.0015uF 50V +/-10% 贴片电容 (0603) X7R 0.0015uF 50V +/-10%		8 PC	C409,C412,C417,C420, C463,C464,C732,C733,
			152		
-2------	108-10B4220B-K0-00	Chip Capacitor (0603) X7R 0.0022uF 50V +/-10% 贴片电容 (0603) X7R 0.0022uF 50V +/-10%		8 PC	C018,C019,C020,C021,C435,C444, C723,C724,
			222		
-2------	108-10B4330B-K0-00	Chip Capacitor (0603) X7R 0.0033uF 50V +/-10% 贴片电容 (0603) X7R 0.0033uF 50V +/-10%		2 PC	C498,C499,
			332		
-2------	108-10B4820B-K0-00	Chip Capacitor (0603) X7R 0.0082uF 50V +/-10% 贴片电容 (0603) X7R 0.0082uF 50V +/-10%		2 PC	C486,C487,
			822		
-2------	108-10B5100B-K0-00	Chip Capacitor (0603) X7R 0.01uF 50V +/-10% 贴片电容 (0603) X7R 0.01uF 50V +/-10% 4K/ROLL		7 PC	C153,C308,C455,C484,C485,C488, C512,
			103		
-2------	108-10B5220A-K0-00	Chip Capacitor (0603) X7R 0.022uF 25V +/-10% 贴片电容(0603)X7R 0.022uF 25V +/-10% 4K/ROLL FORMER NUMBER:106-325A5220-20-00		1 PC	C423,
-2------	108-10B5470A-K0-00	Chip Capacitor (0603) X7R 0.047uF 25V +/-10% 贴片电容 (0603) X7R 0.047uF 25V +/-10% FORMER NUMBER:106-325A5470-20-00		3 PC	C458,C477,C496,

-2------	108-10B5680A-K0-00	Chip Capacitor (0603) X7R 0.068uF 25V +/-10% 贴片电容 (0603) X7R 0.068uF 25V +/-10% FORMER NUMBER:106-325A5680-20-00	1 PC	C422,
-2------	108-10B6100A-K0-10	Chip Capacitor (0603) X7R 0.1uF 25V +/-10% 贴片电容 (0603)X7R 0.1uF 25V +/-10% 4k/reel BY Team Force 联科订料	19 PC	C304,C305,C307,C310,C314,C415, C431,C459,C467,C473,C701,C702, C703,C704,C705,C706,C708,C716, C201,
-2------	108-10B6100A-K0-10	Chip Capacitor (0603) X7R 0.1uF 25V +/-10% 贴片电容 (0603)X7R 0.1uF 25V +/-10% 4k/reel BY Team Force 联科订料	18 PC	C013,C022,C100, C202,C205,C206, C210,C212, C218,C220,C223,C224, C225, C230,C232,C260,C240,C200,
-2------	108-10B6150O-K0-00	Chip Capacitor (0603) X7R 0.15uF 16V +/-10% 贴片电容 (0603)X7R 0.15uF 16V +/-10%	4 PC	C456,C457,C482,C483,
-2------	108-10B6220P-K0-00	Chip Capacitor (0603) X7R 0.22uF 10V +/-10% 贴片电容 (0603) X7R 0.22uF 10V +/-10% 4K/ROLL Former Number:106-310A6220-20-00	3 PC	C710,C711,C714,
-2------	108-10B7100P-K0-00	Chip Capacitor (0603) X7R 1uF 25V +/-10% 贴片电容 (0603) X7R 1uF 25V +/-10%	10 PC	C219,C101,C301,C303,C312, C432, C436,C715,C012,C233,
-2------	108-10B7220P-K0-00	Chip Capacitor (0603) X7R 2.2uF 10V +/-10%	11 PC	C211,C234,C445,C446,C449, C479, C480,C481,C730,C731, C237,

-2------	108-10B7470P-K0-00	Chip Capacitor (0603) X5R 4.7uF 10V +/-10% 贴片电容 (0603) X5R 4.7uF 10V +/-10%	10 PC	C213,C214,C401,C402,C418,C419, C421,C427, C492,C493,
-2------	108-10N1500B-J0-00	Chip Capacitor (0603) NPO 5pF 50V +/-5% 贴片电容 (0603) NPO 5pF 50V +/-5% 106-55091500-20-00	2 PC	C203,C204,
-2------	108-10N2220B-J0-00	Chip Capacitor (0603) NPO 22pF 50V +/-5% 贴片电容 (0603) NPO 22pF 50V +/-5% 106-55092220-20-00	2 PC	C235,C236,
-2------	108-10N2330B-J0-00	Chip Capacitor (0603) NPO 33pF 50V +/-5% 贴片电容 (0603) NPO 33pF 50V +/-5% 106-55092330-20-00	1 PC	C302,
-2------	108-10N3100B-J0-00	Chip Capacitor (0603) NPO 100pF 50V +/-5% 贴片电容 (0603) NPO 100pF 50V +/-5%	7 PC	C228,C229,C306,C508,C509, C510, C511,
-2------	108-21B7100A-K0-00	Chip Capacitor (0805) X7R 1uF 25V +/-10% 贴片电容(0805) X7R 1uF 25V +/-10% < GP6 Model>,3K/PACK	10 PC	C503,C504,C505,C506,C507, C513, C450,C451,C452,C453,
-2------	108-21F74700-Z0-00	Chip Capacitor (0805) Y5V 4.7uF 16V -20/+80% 贴片电容 (0805) Y5V 4.7uF 16V -20/+80% 3K/ROLL	5 PC	C438,C439,C494,C495,C501,
-2------	108-21F8100P-M0-00	Chip Capacitor (0805) Y5V 10uF 10V +80/-20% 贴片电容 (0805) Y5V 10uF 10V +80/-20% 3K/ROLL	15 PC	C014,C015,C207,C208,C221,C222, C315,C401A, C401B,C403,C405,C410,C411,C416, C424,

-2------	108-21F8100P-M0-00	Chip Capacitor (0805) Y5V 10uF 10V +80/-20% 贴片电容 (0805) Y5V 10uF 10V +80/-20% 3K/ROLL	15 PC	C425,C426,C428,C429,C430,C454, C461,C462, C465,C466,C497,C712,C713,C721, C722,
-2------	108-31F8100A-Z0-00	Chip Capacitor (1206) Y5V 10uF 25V -20/+80% 贴片电容 (1206) Y5V 10uF 25V -20/+80% 2K/ROLL	1 PC	C313,
-2------	108-31F8220P-Z0-00	Chip Capacitor (1206) Y5V 22uF 10V -20/+80% 贴片电容 (1206) Y5V 22uF 10V -20/+80% 2K/ROLL	1 PC	C209,
-2------	110-016C9470-00-00	Electrolytic Capacitor 470 uF 16V +/-20%,Size: D 8 X 12mm 电解电容 470 uF 16V +80 -20%, D 8 X 12mm	1 PC	EC310,
-2------	110-016CA220-01-00	Electrolytic Capacitor 2200uF 16V +80% -20%,Size:D10x21mm 电解电容 2200 uF 16V +80 -20%, D10x21	1 PC	EC205,
-2------	110-025C9470-03-00	Electrolytic Capacitor 470 uF 25V +/-20%,Size: D 8 X 14mm 电解电容 470 uF 25V +/-20%, D 8 X 14mm 工作温度：-40/+105度 中山万科	1 PC	EC307,
-2------	110-025CA220-00-00	Electrolytic Capacitor 2200 uF 25V +80 -20% Size:D13 X 21mm 电解电容 2200 uF 25V +80 -20%	1 PC	EC301,
-2------	110-T01000E2-02-00	Ai Electrolytic Capacitor 10uF 25V, +/-20%, D5x11mm, P=2.0mm,Straight Tapping Ai电解电容 10uF 25V, +/-20%, D5x11mm, 脚距=2.0mm, 直型编带. (-40 to +105 Degrees)	6 PC	EC416,EC417,EC418, EC419,EC423,EC424,
-2------	110-T02200C2-00-00	Ai Electrolytic Capacitor 22uF 16V, +/-20%,Size:D5x5mm,P=2.0mm, Straigh Tapping Ai电解电容 22uF 16V, +/-20%, D5x5mm, 脚距=2.0mm, 直型编带	2 PC	EC403,EC708,

		(-40 to +105 Degrees)		
-2------	110-T04700C2-02-00	Ai Electrolytic Capacitor 47uF 16V, +/-20%, D5x11mm, P=2.0mm,Straight Tapping Ai电解电容 47uF 16V, +/-20%, D5x11mm, 脚距=2.0mm, 直型编带. (-40 to +105 Degrees)	6 PC	EC404,EC406,EC409, EC411,EC422,EC501,
-2------	110-T10000C2-02-00	Ai Electrolytic Capacitor 100uF 16V, +/-20%, D5x11mm, P=2.0mm,Straight Tapping Ai电解电容 100uF 16V, +/-20%, D5x11mm, 脚距=2.0mm, 直型编带. (-40 to +105 Degrees)	7 PC	EC701,EC702,EC705,EC709, EC710, EC711,EC712,
-2------	110-T10000C2-02-00	Ai Electrolytic Capacitor 100uF 16V, +/-20%, D5x11mm, P=2.0mm,Straight Tapping Ai电解电容 100uF 16V, +/-20%, D5x11mm, 脚距=2.0mm, 直型编带. (-40 to +105 Degrees)	8 PC	EC101,EC102,EC202,EC203,EC204, EC401,EC402,EC405,
-2------	110-T10000C2-03-00	Ai Electrolytic Capacitor 100uF 25V, +/-20%, D5x11mm, P=2.0mm,Straight Tapping Ai电解电容 100uF 25V, +/-20%, D5x11mm, 脚距=2.0mm, 直型编带. (-40 to +105 Degrees)	8 PC	EC103,EC206,EC303,EC407,EC703, EC315,EC706,EC704,
-2------	110-T22000C3-03-00	Ai Electrolytic Capacitor 220uF 16V, +/-20%, D6.3x12mm, P=2.5mm,Straight Tapping Ai电解电容 220uF 16V, +/-20%, D6.3x12mm, 脚距=2.5mm, 直型编带. (-40 to +105 Degrees)	5 PC	EC412,EC413,EC415,EC420,EC421,
-2------	159-10000150-00-00	SMD INDUCTORS(0603)15nH, MAX 300mA VHF160808H15NJB	1 PC	L405,
-2------	159-GZ1608D1-52-00	SMD INDUCTORS,磁珠,GZ1608D152(0603) Max150mA,对100MHz有1500 ohm阻抗, 对1G有1500 ohm阻抗,工作温度：-55 to 125 供货商：泰丰祥	15 PC	L202,L203,L204,L205,L206,L207, L704,L705,R711,R714,R726, L401, L402,L403,L404,

-2------	159-GZ1608D1-52-00	SMD INDUCTORS,磁珠,GZ1608D152(0603)	14 PC	
		Max150mA,对100MHz有1500 ohm阻抗,		FB201,FB401,FB402,FB403, FB404, FB407,FB408,FB409, FB410,FB412, FB413,L201, R403,L213,
		对1G有1500 ohm阻抗,工作温度：-55 to 125		
		供货商：泰丰祥		
-2------	160-00000220-00-00	Chip Ferrite Bead 220 Ohm/ 100M 0603	6 PC	
		Max 200mA,		L210,L211,L212,L701,L702,L710,
-2------	169-11050547-02-00	Ferrite Choke Transformer OD=11 ID=5.0	1 PC	
		47uH, ±30% ,Wire D=0.5mm		L302,
		47uH, ±30% ,Wire D=0.5mm		
		品名：T11.5x5.6x4.2mm ， 电感量=47uH, ±30%,,线径0.5mm。		
-2------	169-20121001-00-00	Ferrite Choke Transformer OD=20 ID=12	1 PC	
		Wire D=1.0，P/N：T8026-101M 100UH±20%,		L301,
		磁芯扼流圈,外径20,内径12,线径1.0，立式		
		型号：T8026-101M 电感量100±20%UH		
-2------	251-20060HLP-BL-E0	Jumper Wire AWG20，L=60mm ，black	1 PC	
		Terminals gourd slices		单支地线。
		电线 AWG20号 长=60毫米 黑色,		
		一端接葫芦片(处径7.5,内径3.2)		
-2------	362-M5050RCA-00-00	M505 assemble wire	1 PC	
		(with Front/Rear LINE OUT+SUB+ANT+2-ZONE LINE OUT)		RCA LINE OUT+SUB-W组合输出线。
-2------	362-M505REM0-00-00	M505 Remote assemble wire	1 PC	
		(with WIRE REMOTE+XM+OE)		WIRE REMOTE+Sxm+OE组合输出线。
-2------	371-00M505PW-00-00	Clarion M205/505 power wire	1 PC	
		(with 15A FUSE) With 15A Lable		(POWER + speaker)WIRE
-2------	376-LRDJ7161-00-00	Clarion Power Socket,LR-DJ7161-1/1	1 PC	
		for M505/205		ISO16,
-2------	377-H022100L-04-00	FPC/FFC Connector 22 pin SMD,	1 PC	
		W/Locker(Upper Contact, Pitch=1.0mm)		CON702,
		22位FPC/FFC连接器,间距:1.0mm,上接点,卧式		
		SMD 有锁,单排脚.北极大供应		
-2------	378-22100050-L0-00	22P FFC,P=1.0mm,L=50mm,L-Type	1 PC	
		22p FFC,P=1.0mm,L=50mm,L-Type(反向)		22 PIN FCC排线。
-2------	386-0CW51414-SA-S0	Blue Tooth Module，CW51；FOR M505	1 PC	
		CW51_SA_V400B014，BY SMX		IC702

-2------	402-0327680K-03-00	Crystal 32.768 KHz , D3x8mm Frequency tolerance:+/-10ppm 石英晶体 32.768 KHz, D3x8mm +/-10ppm 新首选供应	1 PC	CF201,
-2------	402-1008000M-01-00	Crystal 8MHz, HC49US,H=3.5mm 石英晶体 8MHz, HC49U	1 PC	CF202,
-2------	410-00M505AA-EC-00	M505/M205 Main PCB,171.0X148.6mm,FR4,T=1.6mm M505/M205 主板，厚度1.6mm,FR4,环保喷锡。 供应商：建祥。1拼1。	1 PC	M505/M205 PCB
-2------	416-0S200020-E1-00	Wafer,2 Pin,Pitch 2.0mm Straight,<ELV> 排座2位, 间距 2毫米直身,< ELV >	2 PC	CON101,CON203,
-2------	416-0S200060-E1-10	Wafer,6 Pin,Pitch 2.0mm Straight,< ELV > 6位排座,间距2.0mm,直身,< ELV > 登发供应 代用：416-0S200060-E1-00	2 PC	CON401,CON402,
-2------	416-0S200900-E1-00	Wafer,9 Pin,Pitch 2.0mm Straight,<ELV> 9位排座,间距2.0mm直身,<ELV>	2 PC	CON703,CON704,
-2------	455-FSMD0200-00-00	SMD Resettable Fuse 0.2A (SMD1206) TUZETEC FSMD020-1206 (富致科技供应)富致科技型号为FSMD020-1206 工作保持电流为0.2A ,跳脱电流0.4A IHA=0.2A .ITA =0.4A .VMAX=30VDC , MAK=FB ,REEL/TAPE=3K 工作电压6-30VDC ,产品上标志为(FB) ,每卷3K	1 PC	R230,
-2------	455-FSMD0500-00-00	SMD Resettable Fuse 0.5A (SMD1206) TUZETEC FSMD050-1206 (富致科技供应)富致科技型号为FSMD050-1206 工作保持电流为0.5A	2 PC	PTC301,PTC302,
-2------	455-FSMD0750-00-00	SMD Resettable Fuse 0.75A (SMD1206) TUZETEC FSMD075-1206 (富致科技供应)富致科技型号为FSMD075-1206 750MA自恢复保险丝	1 PC	PTC5,
-2|-----	TUNER28A-SS1000-10	TUNER28A MODULE, AM/FM/WB +(NO RDS) -< W/ HI-CUP >- ALL Freq.	1 PC	SI4743 TUNER28A
--3-----	280-TUNER28A-00-05	FM Ass'y (1/2) - Main - "SI4743 IC"	1 PC	
---4----	059-08310000-01-00	Resistor Network (0402), 8pin 4X100 Ohm	1 PC	

	1/10W, +/-5% 排阻(0402), 4个100 Ohm,电阻并联			RR1,
---4---- 108-10B6100A-K0-10	Chip Capacitor (0603) X7R 0.1uF 25V +/-10% 贴片电容 (0603)X7R 0.1uF 25V +/-10% 4k/reel BY Team Force 联科订料		4 PC	C018,C011,C020,C012,
---4---- 108-10B7100P-K0-00	Chip Capacitor (0603) X7R 1uF 25V +/-10% 贴片电容 (0603) X7R 1uF 25V +/-10%		1 PC	C025,
		105		
---4---- 108-10B7220P-K0-00	Chip Capacitor (0603) X7R 2.2uF 10V +/-10%		2 PC	C023,C024,
---4---- 108-10N2150B-J0-00	Chip Capacitor (0603) NPO 15pF 50V +/-5% 贴片电容 (0603) NPO 15pF 50V +/-5% 106-55092150-20-00		1 PC	C002,
---4---- 108-10N2180B-J0-00	Chip Capacitor (0603) NPO 18pF 50V +/-5% 贴片电容 (0603) NPO 18pF 50V +/-5% 106-55092180-20-00		2 PC	C008,C009,
---4---- 108-10N2300B-J0-00	Chip Capacitor (0603) NPO 30pF 50V +/-5% 贴片电容 (0603) NPO 30pF 50V +/-5% 106-55092300-20-00		2 PC	C003,C004,
---4---- 108-10N3100B-J0-00	Chip Capacitor (0603) NPO 100pF 50V +/-5% 贴片电容 (0603) NPO 100pF 50V +/-5%		1 PC	C001,
---4---- 108-31F8220P-Z0-00	Chip Capacitor (1206) Y5V 22uF 10V -20/+80% 贴片电容 (1206) Y5V 22uF 10V -20/+80% 2K/ROLL		1 PC	EC001,
---4---- 159-10001200-02-00	SMD INDUCTORS,120nH+/-5% SDFL2012LR12JT, MAX 250mA,0805封装，供货商:泰丰祥 产品型号:SDFL2012LR12JT，封装：0805；		1 PC	L001,

		电感量：120NH,误差：±5%， 额定电流：250mA 工作温度：-40 to 85℃		
---4----	159-10002200-10-00	SMD INDUCTORS HBLS2012-R22J 220nH±5%, (0805)，MAX300mA. SMD 叠层电感 HBLS2012-R22J，(0805) 220nH±5%, MAX300mA, L=2.0±0.2 L=2.0±0.2 W=1.25±0.2 T=1.25±0.2（厚身） W=1.2±0.2 T=1.25±0.2 （厚身）泰丰祥供应--牌子:台湾红叶	1 PC	L002,
---4----	159-GZ1608D1-52-00	SMD INDUCTORS,磁珠,GZ1608D152(0603) Max150mA,对100MHz有1500 ohm阻抗, 对1G有1500 ohm阻抗,工作温度：-55 to 125 供货商：泰丰祥	2 PC	L009,L010,
---4----	402-0327680K-10-02	Crystal 32.768 KHz, CFS206，D2x6mm, Operating Temperature Range -20℃ TO +70℃ Frequency tolerance:+/-10ppm, 工作温度:-20℃ - +70℃;保存温度:-40℃ - 新首选供货	1 PC	XT001,
---4----	410-TUNER28A-DC-00	PCB,TUNER Board , 单板Size =30 x 20.5mm, 拼板尺寸:150.5x110=110.5..T=1.2mm, 单板尺寸：30 x 20.5mm：拼板尺寸:1拼25 厚度：1.2mm,工艺：环保喷锡,供应商：伟豪 FR4,	1 PC	TUNER PCB
--3-----	280-TUNER28A-00-15	FM Ass'y (2/2) - Si4743 - < NO RDS > W/ Hi Cut	1 PC	
---4----	001-00SI4743-00-00	Integrated Circuit SI4743 Tuner system IC,QFP24(4X4X0.825 24-Pin QFN)	1 PC	IC001
--3-----	280-TUNER28A-01-15	AM Ass'y (1/1) - < Enable > - AM/FM/WB/-SI4743 ONLY	1 PC	
---4----	007-0009018S-0H-00	SMD Transistor, 9018SH, HFE=97-146 3K/PACKAGE SMD三极管9018SH 3K/PACKAGE 3K/PACKAGE	1 PC	Q002,
---4----	007-00S9014S-00-00	Transistor S9014S,Package SOT-23, HFE=300~400 3K/REEL SMD三极管S9014S 3K/REEL	2 PC	Q003,Q004,

---4---- 058-00342100-00-00	Chip Resistor (0603) 10 Ohm 1/10W +/-5% 贴片电阻(0603)10 Ohm 1/10W +/-5%		1 PC	R010,
---4---- 058-00344470-00-00	Chip Resistor(0603) 4.7K Ohm 1/10W +/-5% 贴片电阻 (0603) 4.7K Ohm 1/10W +/-5% 4K7		2 PC	R007,R008,
---4---- 058-00345100-00-00	Chip Resistor (0603) 10K Ohm 1/10W +/-5% 贴片电阻(0603) 10K Ohm 1/10W +/5% 10K		2 PC	R009,R004,
---4---- 058-00346220-00-00	Chip Resistor(0603) 220K Ohm 1/10W +/-5% 贴片电阻(0603)220K Ohm 1/10W +/-5%		1 PC	R006,
---4---- 058-00348100-00-00	Chip Resistor(0603) 10M Ohm 1/10W +/-5% 贴片电阻(0603) 10M Ohm 1/10W +/-5%		1 PC	R005,
---4---- 108-10B4120B-K0-00	Chip Capacitor (0603) X7R 0.0012uF 50V +/-10% 贴片电容 (0603) X7R 0.0012uF 50V +/-10% 4K/ROLL	122	1 PC	C014,
---4---- 108-10B5180B-M0-00	Chip Capacitor (0603) X7R 0.018uF 50V +/-20% 贴片电容 (0603) X7R 0.018uF 50V +/-20% FORMER NUMBER:106-350B5180-20-00		1 PC	C017,
---4---- 108-10B5330A-K0-00	Chip Capacitor (0603) X7R 0.033uF 25V +/-10% 贴片电容 (0603)X7R 0.033uF 25V +/-10% FORMER NUMBER:106-325A5330-20-00		1 PC	C013,
---4---- 108-10B6100A-K0-10	Chip Capacitor (0603) X7R 0.1uF 25V +/-10% 贴片电容 (0603)X7R 0.1uF 25V +/-10% 4k/reel BY Team Force 联科订料		2 PC	C015,C027,
---4---- 108-10B7100P-K0-00	Chip Capacitor (0603) X7R 1uF 25V +/-10% 贴片电容 (0603) X7R 1uF 25V +/-10%	105	1 PC	C021,
---4---- 108-10F64700-M0-00	Chip Capacitor (0603) Y5V 0.47uF 16V		1 PC	

	+80/-20% 贴片电容 (0603) Y5V 0.47uF/16V +80%/-20% 4K/PACK		C016,
---4---- 108-21B64700-K0-00	Chip Capacitor (0805) X7R 0.47uF 16V +/-10% 贴片电容(0805) X7R 0.47uF 16V +/-10% 4K/PACK	1 PC	C019
---4---- 159-10047000-07-00	SMD CHIP INDUCTORS 4.7UH+/-10% 0805	1 PC	L004,
---4---- 159-10330000-01-40	SMD INDUCTORS,33uH+/- 10%,SMD2520V-330K 生产部试用OK	1 PC	L006,
---4---- 159-GZ1608D1-52-00	SMD INDUCTORS,磁珠,GZ1608D152(0603) Max150mA,对100MHz有1500 ohm阻抗, 对1G有1500 ohm阻抗,工作温度：-55 to 125 供货商：泰丰祥	1 PC	L011,
---4---- 159-NL453232-00-10	SMD INDUCTORS,1MH+/- 5%,NL453232T-102J- PF.4.5× 3.2× 3.2mm（L×W× T） 贴片电感:1MH+/- 5%,NL453232T-102J-PF 30 mA/MAX,Q=30,DRC=40.OHM/MAX,尺寸：4.5× × 3.2× 3.2mm（L×W× T）	1 PC	L005,
---4---- 159-WL322522-00-00	SMD INDUCTORS,220UH+/-10%,WL322522-221K 3225封装。 50mA/MAX,Q=20,DRC=21.OHM/MAX, 供应商：顺鹏电子	1 PC	L007,
1------- 337-00M505-00-00	Panel(1/5) - "M205 & M505" -< 单色灯 > - USB+AUX - 22Pin	1 PC	
-2------ 001-00HT1623-00-00	S,Integrated Circuit,Type HT1623 LQFP-100P LCD DISPLAY DRIVE IC 集成电路 HT1623 封装为 LQFP-48P LCD 显示驱动IC	1 PC	IC901
-2------ 001-0ACP1201-50-00	Integrated Circuit ACP1201-50GTREL, Package,SOT89-3，Tape-Mount,BY VISVIE 5V稳压IC，型号：ACP1201-50GTRE；封装： SOT89-3，编带包装；威斯迈供应 工作温度：-40℃to125℃ 储存温度：-65℃to150℃	1 PC	U1
-2------ 012-0603ESDA-09-00	SMT 0603ESDA-09，ESD 防静电管 ,	3 PC	

		< 比特>		R920B,R921B,R10
		SMT ESD 防静电管 ,型号：0603ESDA-09		
		带装，电容容量：5P,适用于USB2.0		
		工作电压：9V,		
-2------	014-00500056-11-00	Zener Diode SMD 5.6V 0.5W +/-2%	5 PC	
		- DL35 Tape-Binded 2500/PACKAGE		ZD708,ZD709,ZD710, ZD1,ZD2
		然纳二极管SMD,5.6V 0.5W,+/-2% 贴片带装		
		2500 / PACKAGE		
-2------	058-00340000-00-10	Chip Resistor (0603)0 Ohm 1/10W +/-1%	3 PC	
		贴片电阻 (0603) 0 Ohm 1/10W +/-1%		R902,4,6
-2------	058-00342220-00-00	Chip Resistor (0603) 22 Ohm 1/10W +/-5%	2 PC	
		贴片电阻(0603) 22 Ohm 1/10W +/-5%		R2,3
-2------	058-00343100-00-00	Chip Resistor (0603) 100 Ohm 1/10W +/-5%	3 PC	
		贴片电阻 (0603) 100 Ohm 1/10W +/-5%		R223,224,225,
-2------	058-00343270-01-01	Chip Resistor(0603) 270 Ohm 1/10W +/-1%	2 PC	
		贴片电阻(0603) 270 Ohm 1/10W +/-1%		R904,974
-2------	058-00343680-01-00	Chip Resistor(0603) 680 Ohm 1/10W +/-1%	1 PC	
		贴片电阻(0603) 680 Ohm 1/10W +/-1%		R905
-2------	058-00344120-00-10	Chip Resistor (0603)1.2K Ohm 1/10W +/-1%	2 PC	
		贴片电阻 (0603) 1.2K Ohm 1/10W +/-1%		R16,906
-2------	058-00344180-00-10	Chip Resistor(0603) 1.8K Ohm 1/10W +/-1%	2 PC	
		贴片电阻 (0603) 1.8K Ohm 1/10W +/-1%		R907,972,
-2------	058-00344270-00-00	Chip Resistor(0603) 2.7K Ohm 1/10W +/-5%	2 PC	
		贴片电阻 (0603) 2.7K Ohm 1/10W +/-5%		R23,976
-2------	058-00344270-00-10	Chip Resistor (0603)2.7K Ohm 1/10W +/-1%	2 PC	
		贴片电阻 (0603) 2.7K Ohm 1/10W +/-1%		R908,R973,
-2------	058-00344430-01-00	Chip Resistor(0603) 4K3 Ohm 1/10W +/-1%	1 PC	
		贴片电阻(0603) 4K3 Ohm 1/10W +/-1%		R909,
-2------	058-00344510-00-00	Chip Resistor(0603) 5.1K Ohm 1/10W +/-5%	1 PC	
		贴片电阻 (0603) 5.1K Ohm 1/10W +/-5%		R17
-2------	058-00344680-01-00	Chip Resistor(0603) 6K8 Ohm 1/10W +/-1%	2 PC	
		贴片电阻(0603) 6K8 Ohm 1/10W +/-1%		R911,975,
-2------	058-00345120-00-10	Chip Resistor (0603) 12K Ohm 1/10W +/-1%	2 PC	
		贴片电阻(0603) 12K Ohm 1/10W +/-1%		R901,912,
-2------	058-00345470-00-00	Chip Resistor (0603) 47K Ohm 1/10W +/-5%	2 PC	
		贴片电阻(0603) 47K Ohm 1/10W +/-5%		R954,R956,

	47K			
-2------	058-00345820-00-00	Chip Resistor (0603) 82K Ohm 1/10W +/-5% 贴片电阻(0603) 82K Ohm 1/10W +/-5%	1 PC	R957
-2------	058-00346330-00-00	Chip Resistor(0603) 330K Ohm 1/10W +/-5% 贴片电阻(0603) 330K Ohm 1/10W +/-5%	2 PC	R8,9
-2------	058-00444100-00-00	CHIP Resistor (0805) 1K Ohm 1/8W +/-5% 表面钎接电阻 (0805) 1K Ohm 1/8W +/-5%	1 PC	R916
-2------	058-00444430-00-00	CHIP Resistor (0805) 4K3 Ohm 1/8W +/-1% 贴片电阻 (0805) 4K3 Ohm 1/8W +/-1%	1 PC	R14
-2------	058-00640000-00-00	Chip Resistor (1206) 0 Ohm 1/4W +/-5%	1 PC	R1
-2------	058-00641100-00-00	Chip Resistor (1206) 1Ohm 1/4W +/-5% 贴片电阻(1206) 1Ohm 1/4W +/-5%	1 PC	R29
-2------	108-0510104K-00-JV	Chip Capacitor(0402)0.1U 10V +/-10%	1 PC	C910,
-2------	108-10B4100B-K0-00	Chip Capacitor (0603) X7R 0.001uF 50V +/-10% 贴片电容 (0603) X7R 0.001uF 50V +/-10%	3 PC	C954,3,5
		102		
-2------	108-10F6100A-M0-00	Chip Capacitor (0603) Y5V 0.1uF 25V +80/-20% 贴片电容 (0603)Y5V 0.1uF 25V +80/-20%	3 PC	C908,C912,C970,
-2------	108-10N2330B-J0-00	Chip Capacitor (0603) NPO 33pF 50V +/-5% 贴片电容 (0603) NPO 33pF 50V +/-5% 106-55092330-20-00	1 PC	C986
-2------	108-10N3100B-J0-00	Chip Capacitor (0603) NPO 100pF 50V +/-5% 贴片电容 (0603) NPO 100pF 50V +/-5%	6 PC	C4,C201,C202,C203,C983,C985,
-2------	108-21F8100P-M0-00	Chip Capacitor (0805) Y5V 10uF 10V +80/-20% 贴片电容 (0805) Y5V 10uF 10V +80/-20% 3K/ROLL	3 PC	C911,1,2
-2------	108-31F82200-M0-00	Chip Capacitor (1206) Y5V 22uF 16V +/-20% 贴片电容(1206) Y5V 22uF 16V +/-20%	1 PC	C909

-2------	115-016C9100-00-00	SMT Electrolytic Capacitor 100 uF 16V +/-20%,Size: L5.4 x W6.3mm(ECEV1CA101WP) 贴片铝电解电容 100 uF 16V +/ -20%, 焊盘封装：长5.4 x 宽6.3mm/105度	1 PC	EC1
-2------	160-00001500-00-00	Chip Ferrite Bead 1K5 Ohm/ 100M 0603 2013-7-10:深圳杰智达回复最大100mA	4 PC	FB201,FB1,2,3
-2------	160-CBW9U600-00-00	CHIP BEAD(CBW TYPE), 0805,阻抗 60Ω/ 100 MHz(+/-25%)at100MHz ,3A 大电流型磁珠:100Mhz下阻抗为60Ω +/-25% 最大电流：3A,由深圳泰丰祥提供。 代用：160-0CBW2600-M0-00 型号:CBW201209U600	1 PC	FB903
-2------	204-TS063543-R9-00	Surface Mount Tact Switch H=4.3,L=6.1 ,W=3.5mm, White,180+/-50gf,< ROHS> Ver 表面焊接按制, H=4.3,L=6.0,W=3.5MM,按制顶 端触按塑胶红色,180+/-50gf,环保耐高温 PHILIPS MODE 编带，浙江合业提供 供应商型号：KFC-A03-02THn，用于PHILIPS机型 2009-7-28: 单号从LF00152开始，按制顶端触按塑胶由白色改为红色 (陈老板直接通知合业更改)	16 PC	SW,2,4,5,6 7891011 121315903 904905906
-2------	214-EC110201-M2-00	Rotary Encoder,D12mm, With Switch 15 Pulses,30 Detents,Vertical Model: 编码器,15脉冲,30触点,D12mm, 直立 式开关,D型金属轴,供应商:升威公司 EC110201M2D-HAI-330, D Type Shaft, Soundwell EC110201M2D-HAI-330, D Type Shaft, Soundwell	1 PC	EN901
-2------	377-H022100L-04-00	FPC/FFC Connector 22 pin SMD, W/Locker(Upper Contact, Pitch=1.0mm) 22位FPC/FFC连接器,间距:1.0mm,上接点,卧式 SMD 有锁,单排脚.北极大供应	1 PC	CON1
-2------	410-00M505C2-DC-00	*PANEL PCB CPU=M505 Size=193.7X44.5MM 1拼3 PCS T=1.6mm FR4 PANEL PCB CPU=M505尺寸:Size=193.7X44.5M T=1.6mm FR4 1拼3 PCS 供应商:建祥,	1 PC	PANEL PCB

		工艺: 镀金. 拼板总尺寸：193.7X134.5MM		
-2------	410-00M505F2-DC-00	AUX PCB CPU=M505 Size=13.5X15MM 1拼3 PCS T=1.6mm FR4 AUX PCB CPU=M505 尺寸:Size=13.5X15 MM T=1.6mm FR4 1拼3 PCS 供应商:建祥 工艺: 喷锡. 这个PCB 拼在PANEL PCB上	1 PC	AUX PCB
-2------	412-JXTUSBA1-80-10	USB Socket.Straight Type, H=10.5mm Model =JXTUSBA180,(ELV),Black Pastern Heart USB插座,直立,底板安装式 ELV,H=10.5mm 增加了引脚长度.Model=JXTUSBA180,黑色胶心 <北极大公司> 代用：412-JXTUSB1-80-00（全部机型可用）	1 PC	USB901
-2------	420-350327D0-00-00	A/V Jack 3.5mm,Model:PJ-327D AG(4 Pin)- < ELV > 供应商：合冠电子 3.5mm A/V JACK插座,4脚 Model:PJ-327D AG(4 Pin)	1 PC	CON903
1-------	337-00M505-00-10	Panel(2/5) - LCD Display Backlight -< White LED >	1 PC	
-2------	017-GY34EU86-W2-A0	LED D3xL4.15mm,Model:GY-34EU86W2CMC-AE-L 2Pin White VF=3.2V IF=20mA IV=2500mcd 发光二极管 白色(超亮) 2Pin D3xL4.15mm VF=3.2V IF=20mA IV=2500mcd 光宇公司 (PHILIPS CEM200) GUANG YU	2 PC	LED18,911
-2------	058-00443330-00-00	CHIP Resistor (0805) 330 Ohm 1/8W +/-5% 表面钎接电阻 (0805) 330 Ohm 1/8W +/-5%	2 PC	R5,7
1-------	337-00M505-00-20	Panel(3/5) - Button Backlight:Single -< Blue > LED	1 PC	
-2------	017-QL1608SB-C0-A0	LED(SMD 0603)Size=1.6x0.8x0.8,Blue 4K/R Part on:QL-1608SBC-0.8 VF=3V IV=20mA 发光二极管 蓝色(超亮偏蓝),SMD,0603 带装 4K/卷 VF=3V IV=20mA IV=100mcd 勤沥公司 IF=100mcd QIN LI 尺寸=1.6x0.8x0.8mm	15 PC	LED3,4,5,6,7, 89101112 1314151617
-2------	058-00443180-00-00	CHIP Resistor (0805) 180 Ohm 1/8W +/-5%	7 PC	

	贴片电阻(0805) 180 Ohm 1/8W +/-5%		R914,R915,R936,R924,R937,R938, R939
-2------058-00444100-00-00	CHIP Resistor (0805) 1K Ohm 1/8W +/-5% 表面钎接电阻 (0805) 1K Ohm 1/8W +/-5%	1 PC	 R922
1-------337-00M505-00-30	Panel(4/5) - < W/RC > - Remote Control	1 PC	
-2------058-00343180-00-00	Chip Resistor (0603) 180 Ohm 1/10W +/-5% 贴片电阻 (0603) 180 Ohm 1/10W +/-5%	1 PC	 R960
-2------058-00344100-00-00	Chip Resistor (0603) 1K Ohm 1/10W +/-5% 贴片电阻 (0603) 1K Ohm 1/10W +/-5% 1K	1 PC	 R724
-2------115-016C9100-00-00	SMT Electrolytic Capacitor 100 uF 16V +/-20%,Size: L5.4 x W6.3mm(ECEV1CA101WP) 贴片铝电解电容 100 uF 16V +/ -20%, 焊盘封装：长5.4 x 宽6.3mm/105度	1 PC	 EC901
-2------358-STM5083S-00-00	Infra Red Receiver,STM-5083SM,2.4~5.5V W/O Metal Shield Cap,940nm,37.9KHz, 红外线接收器:STM-5083SM,2.4~5.5 波长:940nm,频率:37.9KHz,脚距：1.27mm 抗光型,由光科公司提供	1 PC	 IR
1-------337-00M505-00-40	Panel(5/5) - LCD Ass'y - Negative -< White LED > Illu	1 PC	
-2------440-0C353430-00-00	LCD,Part No:C353430PFTR(A?),Size=75x26mm M205_505 Model FSTN POSITIVE CHARISH 液晶显示器 Part No:C353430PFTR,(A?) 版本 FSTN 正像 Size=75x26mm 捷尔士公司	1 PC	 LCD
1-------337-00M505-55-00	Main Chassis(1/2) - Main	1 PC	
-2------650-000SL835-00-00	7808 IC Bracket,1.0t EGI,Kinetics 7808 IC支架,1.0t EGI 1.0t EGI,Kineti,Nature	2 PC	
-2------650-CEM310001-00-00	Main Bracket T=0.8mm EGI 主架，厚度0.8mm，EGI 原色 0.8t EGI,Kineti,Nature	1 PC	
-2------650-SM100804-10-00	TOP COVER T=0.6mm EGI NO LOGO 顶盖，厚度0.6mm，EGI 无LOGO冲字 0.6t EGI,Kineti,Nature(No Logo)	1 PC	
-2------660-EBH2605B-21-00	Taptite `S`Type, 2.6x5 "B"Head, Philips	5 PC	

	Plating White zinc			″Main PCB-2, Top Cover-1, Front Panel-2″
	金属自攻螺丝,2.6x5 ″B″头,白锌 机牙自攻螺丝：BM2.6x5.0，材质：1022，电镀：白锌，硬度：496HV， 供应商：金牌			
-2------660-MPH30060-21-00	Machine Screw, 3x6 Pan Head, Philips,	2 PC		
	Plating White Zinc			L7808
	机牙螺丝,3x6 ″P″头,白锌 机牙螺丝：3x6x5.5PM，电镀：白锌，材质：1006A，硬度：241HV 供应商：金牌			
-2------704-00M50502-00-00	DRIP PROOF COVER,PC SHEET(Black),0.25mm	1 PC		
	PC防水片,0.25mm黑色			
-2------704-CEM310001-00-00	Clarity PC T=0.25mm	1 PC		
	透明PC片 厚度=0.25mm 底盖绝缘用			
1-------337-00M505-55-10	Main Chassis(2/2) - W/Half Sleeve	1 PC		
-2------650-CEM200005-00-00	HALF-SLEEVE T=0.6mm EGI	1 PC		
	半套，厚度0.6mm，EGI 原色 0.6t EGI,Kineti,Nature			
1-------337-00M505-60-00	Heat Sink Ass'y - Common - 电泳黑色	1 PC		
-2------650-00M50502-00-00	Rear_Chassis,0.8mm SECC,Nature	1 PC		
	后侧支架,0.8mm SECC,原色			
-2------650-SM100805-60-00	HEAT SINK,ADC-12, W/Electrophoresis black	1 PC		
	散热片,开大缺口,后加工处理：电泳黑色			
-2------650-SM885A07-00-00	IC Bracket,0.8mm EGI	1 PC		
	IC支架,0.8mm EGI			
-2------660-EBH2605B-21-00	Taptite `S`Type, 2.6x5 ″B″Head, Philips	4 PC		
	Plating White zinc			Rear Chassis-2
	金属自攻螺丝,2.6x5 ″B″头,白锌 机牙自攻螺丝：BM2.6x5.0，材质：1022，电镀：白锌，硬度：496HV， 供应商：金牌			
-2------660-EBH2610B-21-00	Taptite `S`Type, 2.6x10″B″Head, Philips	4 PC		
	Plating White Zinc			Heatsink
	金属自攻螺丝,2.6x10 ″B″头,白锌			

		机牙自攻螺丝：BM2.6x10，材质：1022，电镀：白锌，硬度：498HV， 供应商：金牌		
-2------	660-MPH30160-21-00	Machine Screw,3x16 Pan Head,Philips Plating White Zinc 机牙螺丝,3x16 "P"头,白锌 机牙螺丝：PM3x16，材质：1006A，电镀：白锌，252HV， 供应商：东泰源	2 PC	
1-------	337-00M505-70-00	Fix Type Panel(1/2) - Main	1 PC	
-2------	443-07507820-00-00	Rubber Contact (SI Type) L=75 H=2 W=7.8mm Pitch=0.1mm 导电胶 (SI Type) 长=75 高=2 宽=7.8mm 间距=0.1mm	1 PC	
-2------	600-00M50509-00-00	LCD Light Guide,(Clear)PMMA LCD导光块,透明PMMA	1 PC	
-2------	600-00M50510-00-00	SRC Button Adapter, PC(Milky White) 模式钮托片,乳白色PC，	1 PC	
-2------	600-00M50514-00-00	Multi Button Adapter, PC(Milky White) W/Spray Black 多重钮托片,乳白色PC,喷黑色.	1 PC	
-2------	600-00M50518-00-00	USB Cover Stopper, PC(Milky White) USB盖限位支架,乳白色PC	1 PC	
-2------	600-00M50519-00-00	LCD Holder, PC(White) LCD托架,白色PC	1 PC	
-2------	600-00M50520-00-00	Knob Light Guide, PC(Milkly White) 旋钮导光块,乳白色PC(+UV)	1 PC	
-2------	650-00M50501-00-00	LCD Bracket,0.5mm SECC,W/Spray LCD五金盖,0.5mm SECC,喷黑油	1 PC	
-2------	660-TPH20081-23-00	Tapping `A`Type, 2x8 Pan Head, Philips, Chromate 自攻螺丝,2x8 "P"头,ATP,电铬 华江：2010-01-06修改 直接代用货号：660-TPH20081-23-00； 机牙螺丝：PA2x8，材质：（1018铁线） 颜色：（环保镍）	7 PC	Key PCB

		由俊朗五金塑胶有限公司提供;		
-2------	704-00M50501-00-00	LCD FILTER SHEET,0.1mm PC Sheet, Color: Milk White,W/Silkscreen Black LCD滤光片,0.2mm PC片,奶白色 带黑色边框	1 PC	
-2------	851-00502020-10-00	Foam Rubber(Black),L=5 W=2 H=2 ,W/Double Sided Tape 轻胶(黑色) ,长=5,宽=2,高=2mm, 连双面胶	2 PC	遮镜片扣位漏光处
-2------	852-00435025-10-00	Rubber pad, L=4,W=3.5,H=2.5mm,70度 W/Double 3M Side Tape 橡胶垫, 长=4 宽=3.5 高=2.5mm, 70度, 底	2 PC	垫LED
-2------	891-00241202-00-00	Rubberized fabric,24x12x0.2mm,Black, 醋酸胶布,24x12x0.2mm黑色,一面带胶水,天将	2 PC	遮LED漏光
1-------	337-00M505-70-10	Fix Type Panel(2/2) - (W/ Remote)	1 PC	
-2------	851-C010C004-25-00	Foam Rubber(Black),t=2.5 OD=10,ID=4mm W/Double Sided Tape 轻胶(黑色),厚=2.5mm,外径=10,内径=4mm, 连双面胶	1 PC	
-2------	852-00505070-10-00	Rubber pad, L=5,W=5,H=7mm,70度 W/Double 3M Side Tape 橡胶垫, 长=5 宽=5 高=7mm, 70度, 底部带3	1 PC	
1-------	337-00M505-75-01	Color(1) - Trim Plate - White(+UV) - Silver 877C	1 PC	
-2------	600-00M50503-01-00	Trim Plate,ABS777D(White+UV),W/Spray Silver 877C Color 装饰框,白色ABS777D(+UV), 喷877C油	1 PC	
1-------	337-00M505-75-10	Color(2)- Front Panel - Grey(+UV) - Spray Silver 877C	1 PC	
-2------	600-00M50501-00-00	Front Panel, PC+ABS(Gray)+UV,W/Spray Silver 877C 面壳,PC+ABS(灰色)+UV, 喷877C油	1 PC	
1-------	337-00M505-75-20	Color(3)- SRC Button Ring - Chrome Silver	1 PC	
-2------	600-00M50504-00-00	SRC Button Ring,ABS777D(White+UV),W/Chrome Silver 模式钮装饰圈,白色ABS777D+(UV), 电镀银	1 PC	

1-------	337-00M505-75-30	Color(4)- Rotary Knob+Knob Cover+Rubber - White(+UV) + Chrome Silver	1 PC
-2------	444-00M50501-00-00	Rubber Ring, Si Rubber,Gray,70° OD=21.2,ID=19,H=4.3 橡胶圈，灰色硅橡胶，外径=21.2，内径=19 mm，高度=4.3mm 70度	1 PC
-2------	600-00M50505-00-00	Rotary Knob,ABS777D(White+UV),W/Chrome Silver 旋钮,白色ABS777D(+UV)，电镀银.	1 PC
-2------	600-00M50506-00-00	Knob Cover,ABS777D(White+UV),W/Spray White Color 旋钮盖,白色ABS777D(+UV)，喷白色.	1 PC
1-------	337-00M505-75-40	Color(5) - Decorate Bar - Chrome Silver	1 PC
-2------	600-00M50507-00-00	Decorate Bar,ABS777D(White+UV),W/Chrome Silver 装饰条,白色ABS777D(+UV)，电镀银色	1 PC
1-------	337-00M505-75-50	Color(6) - Reset Button - White(+UV) - Silver 887C	1 PC
-2------	600-00M50517-00-00	Reset Button,PC(Milky White+UV),W/Spray Silver 877C 重置钮,乳白色PC,喷银色877C油	1 PC
1-------	337-00M505-76-00-00	Silkscreen(1) - Illu Button - Function (M505)- White(+UV) - CLARION	1 PC
-2------	600-00M50511-00-00	Menu Button, PC(Milky White+UV),W/Spray White & Illu "BAND" 菜单钮,乳白色PC+(UV),喷白油,透光:BAND	1 PC
-2------	600-00M50512-00-00	Band Button, PC(Milky White+UV),W/Spray White & Illu "MENU" 波段钮,乳白色PC+(UV)，喷白,透光:MENU	1 PC
-2------	600-00M50513-00-00	Sound Button, PC(Milky White+UV),W/Spray White & Illu "SOUND" 音效钮,乳白色PC(+UV),喷白,透光:SOUND	1 PC
-2------	600-00M50515-00-00	Multi Function Button A,PC(Milky White+UV),W/Spray White & Illu "PS/AS,ISR,I<<,>>I" 多功能钮A,乳白色PC(+UV),喷白油,透光:	1 PC

		"PS/AS,ISR,I<<,>>I"	
-2------	600-00M50516-00-00	Multi Function Button B, PC(Milky White+UV),W/Spray White & Illu "1,2,3,4,5,6,DISP" 多功能钮B,乳白色PC(+UV),喷白油,透光:"1,2,3,4,5,6,DISP"	1 PC
1-------	337-00M505-77-00-00	Silkscreen(2) - Clear Blue Button - SRC (M505)- White / (Silksc)	1 PC
-2------	600-00M50508-10-00	SRC Button,(Clear Blue 632C)PMMA,W/Silkscreen "Power Symbol,SRC" White Color 模式钮,深蓝色632C透明PMMA，丝印白色:"电符号,SRC"	1 PC
1-------	337-00M505-78-00-01	Silkscreen(3) - USB Cover - Silver 887C - 431C / (Silksc)	1 PC
-2------	600-00M50521-00-01	USB Cover, Gray PC+90° TPU(+UV), W/Spray Silver 877C & Silksc "AUX,USB Symbol" 431C USB,灰色PC+90度TPU(+UV)，喷银色877C,丝印431C:"AUX,USB 符号"	1 PC
1-------	337-00M505-80-10	Packing Ass'y - 6 Sets/CTN	1 PC
-2------	750-02300300-00-00	Corrugated Paper Sheet, L=230 x W=300mm, Double Corrugated 瓦通纸(双坑),L=230 x W=300mm. B=C	1 PC
-2------	759-27032005-30-45	Polybag,Open Side=270 x L=320 x T=0.03mm Material:PO, w/Air Holes,(in 5 Language) 胶袋,开口尺寸=270x长=320x厚=0.03mm,材料:PO,有环保标志&警告文字&通风孔.Rev.1 Recycle Mark,Warning Text.-Rev.1-	1 PC
-2------	763-00M50500-06-00	Carton (Premium box) forM505, 6 Sets/CTN SIZE: 53x24.8x32.2cm 5 部装(礼盒),K=A加强芯，53x24.8x32.2cm	0.1667 PC
-2------	769-00M50501-00-00	Pulp Tray,SIZE:300X230X73mm 纸托,尺寸:长X宽X高：300X230X73mm	1 PC
1-------	337-00M505-85-00	Accessories - Unit Key + M5x8 Screw - Std*	1 PC
-2------	650-CS880000-25-02	Mounting Plate(Short), EGI, Kinetics 固定片(短),EGI	1 PC
-2------	650-SM300709-01-00	Unit Key,1mm EGI,W/LOCKER	2 PC

		钥匙,1mm EGI,带钩子		
-2------	660-MHD50120-01-01	Machine Screw,M5x12+M5x5.5Hexagonal Head Plating Color Zinc 双头六角机牙螺丝,M5x12+M5x5.5,镀彩锌 双头机牙螺丝，5x11.5+8x3.5+5x4.5六角中字钉，材质： 1006A，电镀：彩锌，硬度：242GHV， 供应商：协力	1 PC	
-2------	660-MHW50080-00-00	Machine Screw,M5x8 Hexagonal Head ,Ordinary color zinc 六角垫圆圈机牙螺丝,M5x8普通彩锌	4 PC	
-2------	660-MKF50070-27-00	Machine Screw, M5x7 Flat Countersunk, yellow zinc, Philips,Head 机牙螺丝,M5x7,平头,彩锌	4 PC	
-2------	661-SWM05000-00-00	Spring Washer M5 弹弓介子 M5	2 PC	
-2------	662-HNM50040-00-00	Hexagon Nut M5xP0.8x4t 六角丝帽 M5xP0.8x4t LIU：2009-12-25修改 直接代用货号：662-HNM50040-00-00; 机牙螺丝：M5x8x4，材质：（铁） 颜色：（镀白锌） 由俊朗五金塑胶有限公司提供;	1 PC	
-2------	759-04020001-60-60	Polybag,Open Side=40xL=200xT=0.06mm ,Material PE Recycled With Recycled Mark 胶袋,开口尺寸=40x长=200x 厚=0.06mm 材料:PE,有环保标志	1 PC	铁条
-2------	759-07523000-40-00	Polybag, Open Side=75 x L=230 x T=0.04mm Material : PE 胶袋,开口尺寸=75x 长=230 x 厚=0.04mm 材料:PE	1 PC	
-2------	759-08009001-40-00	Polybag, Open Side=80 x L=90 x T=0.04mm Material: PE Recycle, With Recycling 胶袋,开口尺寸=80x长=90x厚=0.04mm, 材料:PE,有环保标志.	1 PC	
1-------	337-00M505-B0-10	Brand Name Ass'y - CLARION M505 -(MP) Only	1 PC	
-2------	600-00M50502-CN-01	Lens,PMMA(Clear),W/Silkscreen for	1 PC	

		CLARION M505 镜片,透明PMMA，丝印用于:CLARION M505 W/RC.		
-2------	706-00M50501-CN-00	Wiring Label,AM/FM,USA for Clarion M505 75x65mm，铝膜/黑字	1 PC	
-2------	706-00M50518-CN-00	Serial No Label W/Bar Code 128 for CLARION M505 白底/黑字，92x15mm，4个用量，跳号， （每次订单跳号请等我们给资料）	4 PC	Uint,G/B, CARTONx2
-2------	752-00M505CN-02-01	Instruction Manual, CLARION M505/M205 in 3 LanguageVer. < Rev.1 > 68页　书纸（70g）145x210mm 单黑　3国语言	1 PC	
-2------	754-CN00M505-01-00	Warranty Card for CLARION M505/M205 2页，120x165mm,书纸(120g),单黑/双面印	1 PC	
-2------	756-00M505CN-01-01	Gift Box, CLARION M505 贴盒，磨光，236x85x307mm，4C， 300G+A9加强芯	1 PC	
1-------	RCX001-CN0001-00	"RCX001" Remote Control for Clarion (M505) - Supply By Soundmax	1 PC	

Wiring and Connection

Version	Change number	Changes that	Change date

PINNO.	WIRECOLOR	WIREDEFINITION	WIREGAUGE
1	GREEN	REARLEFTSPEAKER+	20AWG
2	WHITE/BLACK	FRONTLEFTSPEAKER-	20AWG
3	WHITE	FRONTLEFTSPEAKER+	20AWG
4	GREY	FRONTRIGHTSPEAKER+	20AWG
5	GREY/BLACK	FRONTRIGHTSPEAKER-	20AWG
6	PURPLE	REARRIGHTSPEAKER+	20AWG
7	PURPLE/BLACK	REARRIGHTSPEAKER-	20AWG
8	YELLOW	12VBATTERY	18AWG
9	GREEN/BLACK	REARLEFTSPEAKER(-)	20AWG
10			
11	RED	12VIGNITION	20AWG
12	BLUE	POWERANTENNA	20AWG
13	BLUE/WHITE	AMPLIFIERREMOTETURNON	20AWG
14	ORANGE/WHITE	ILLUMINATION/DIMMER	20AWG
15			
16	BLACK	GROUND	18AWG

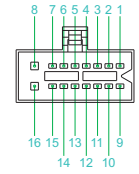

DIRECTIONA

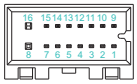

DETAILB

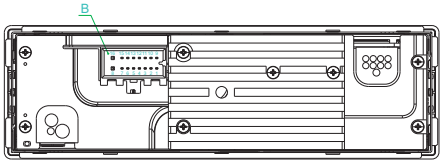

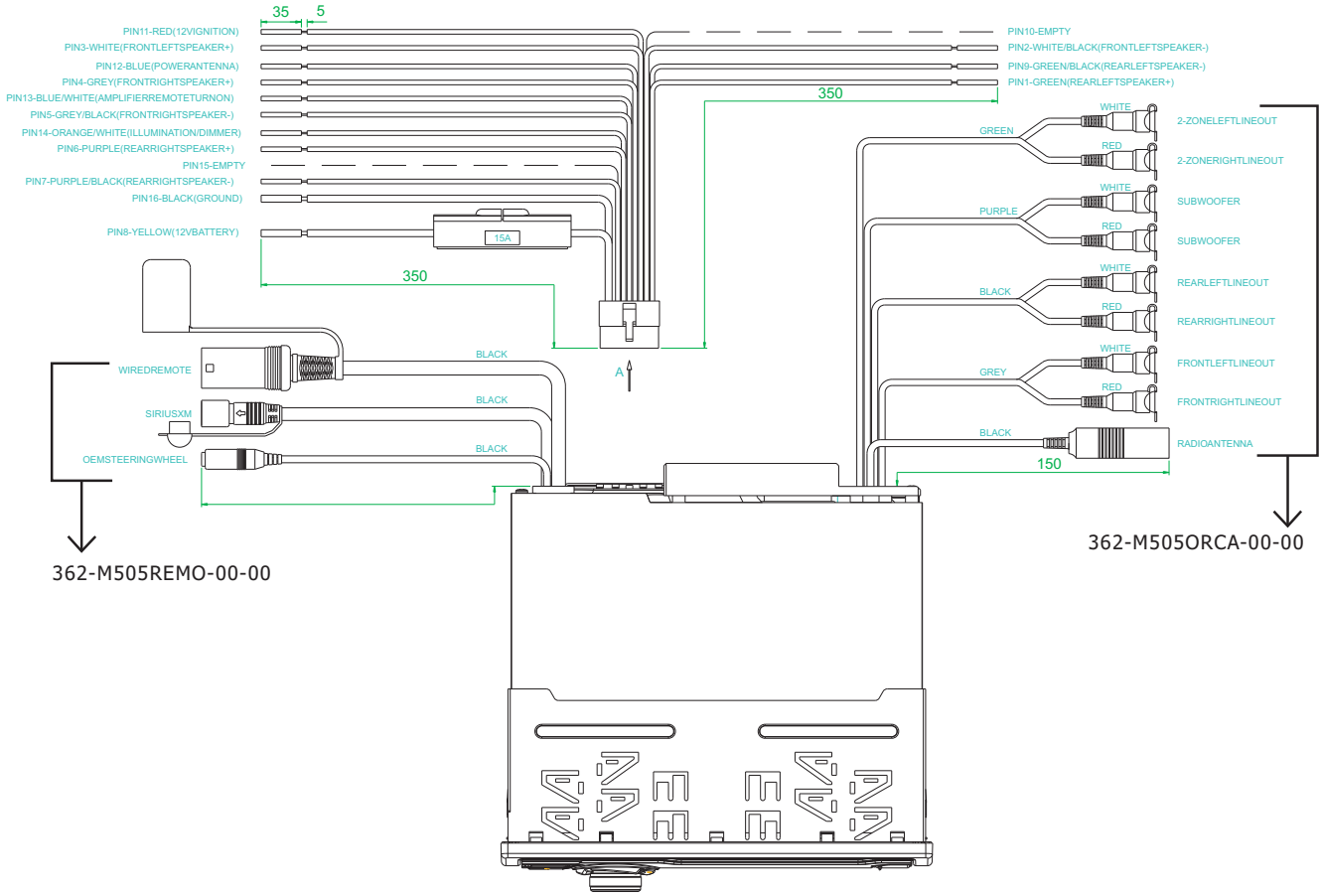

Description			File name	Wiring and Connection			
Author	Audit	Approve	Customer name	Clarion			
Fong	Linda	Kent	Model	M505			
2015.03.06	2015.03.06	2015.03.06	Part NO.	362-M505REMO-00-00 362-M505ORCA-00-00			
SOUNDMAX Electronics Ltd.			File	File number	Pagination	Ver	Size
					1/1	1.0	A4

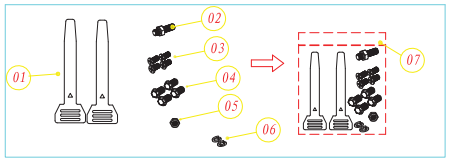

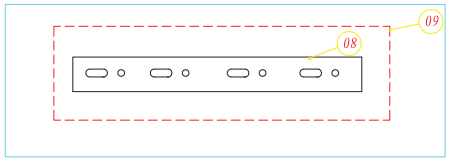

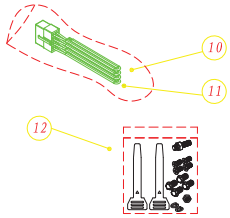

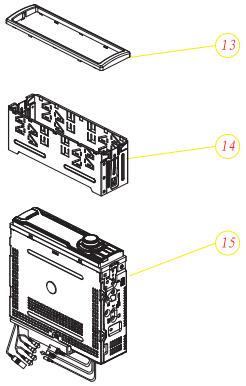

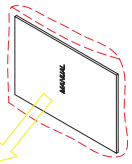

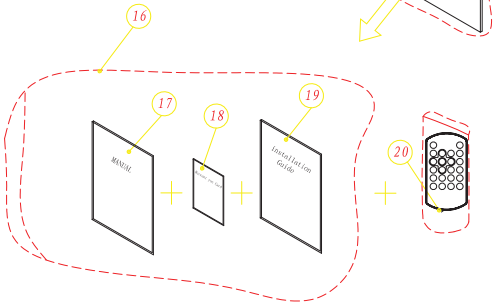

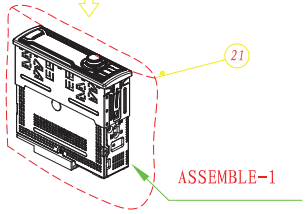

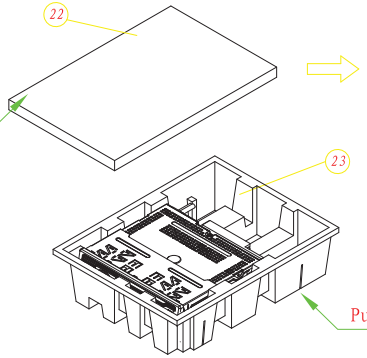

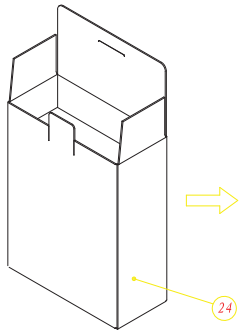

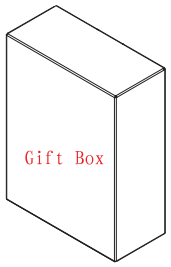

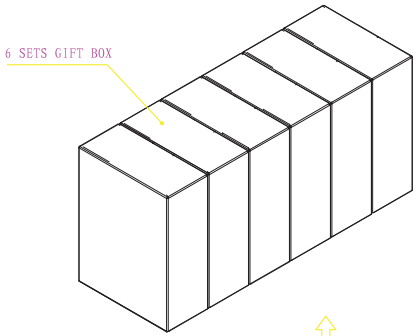

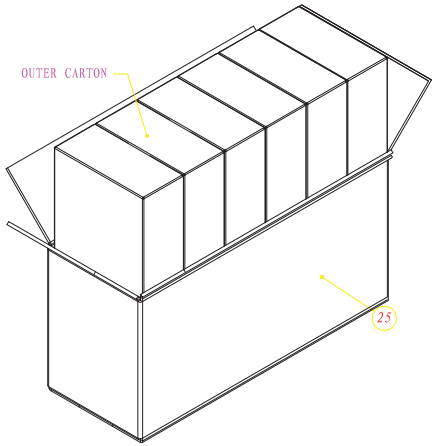

Item	Assembly Part NO	Description	Quantity	REMARK
25	763-00M50500-06-00	Carton for M505	1	
24	756-00M505CN-01-00	Gift Box	1	
23	769-00M50501-00-00	Pulp Tray	1	
22	750-02300300-00-00	Corrugated Paper Sheet, L=230 x W=300mm	1	
21	759-27032005-30-45	Polybag, Open Side=270 x L=320 x T=0.03mm	1	
20	RCX001-CN0001-00	"RCX001" Remote Control for Clarion (M505)	1	
19	NO P/NO	Installation Guide Card	1	
18	754-CN00M505-01-00	Warrantyon Card	1	
17	752-00M505CN-02-00	instruction Manual	1	
16	759-17022005-30-45	poly bag, Open side=170mm*L=220mm*T=0.04mm	1	
15		mainframe	1	
14	650-CEM200005-00-00	HALF-SLEEVE	1	
13	600-00M50503-00-00	Trim Plate	1	
12	759-07523000-40-00	Polybag, Open Side=75 x L=230 x T=0.04mm	1	
11	759-46036000-40-00	poly bag, Open side=460mm*L=360mm*T=0.04mm	1	
10	37100M505PW0000	wire rod	1	
9	759-04020001-60-60	Polybag, Open Side=40xL=200xT=0.06mm	1	
8	650-CS880000-25-02	Mounting Plate(Short), EGI, Kinetics	1	
7	759-07523000-40-00	Polybag, Open Side=75 x L=230 x T=0.04mm	1	
6	661-SWM05000-00-00	Spring Washer M5	2	
5	662-HNM50040-00-00	Hexagon Nut M5xP0.8x4i	1	
4	660-MHW50080-00-00	Machine Screw,M5x8 Hexagonal Head	4	
3	660-MKF50070-27-00	Machine Screw, M5x7 Flat Countersunk	4	
2	660-MHD50120-01-01	Machine Screw,M5x12+M5x5.5Hexagonal Head,Yellow zinc	1	
1	650-SM300709-01-00	Unit Key, T=1.0mm EGI	1	

NO.	DESCRIPTION	MATERIAL	FINISH (COLOR)	Q'TY	REMARK
DESIGN	CHECK	APPROVAL	G.TOL ±0.1	NAME	M505/205 packing-explode
Deng			SCALE	UNIT	MODEL NO.	FILE	SIZE
2015-01-27					PART NO.		

SOUNDMAX ® Electronics Limited
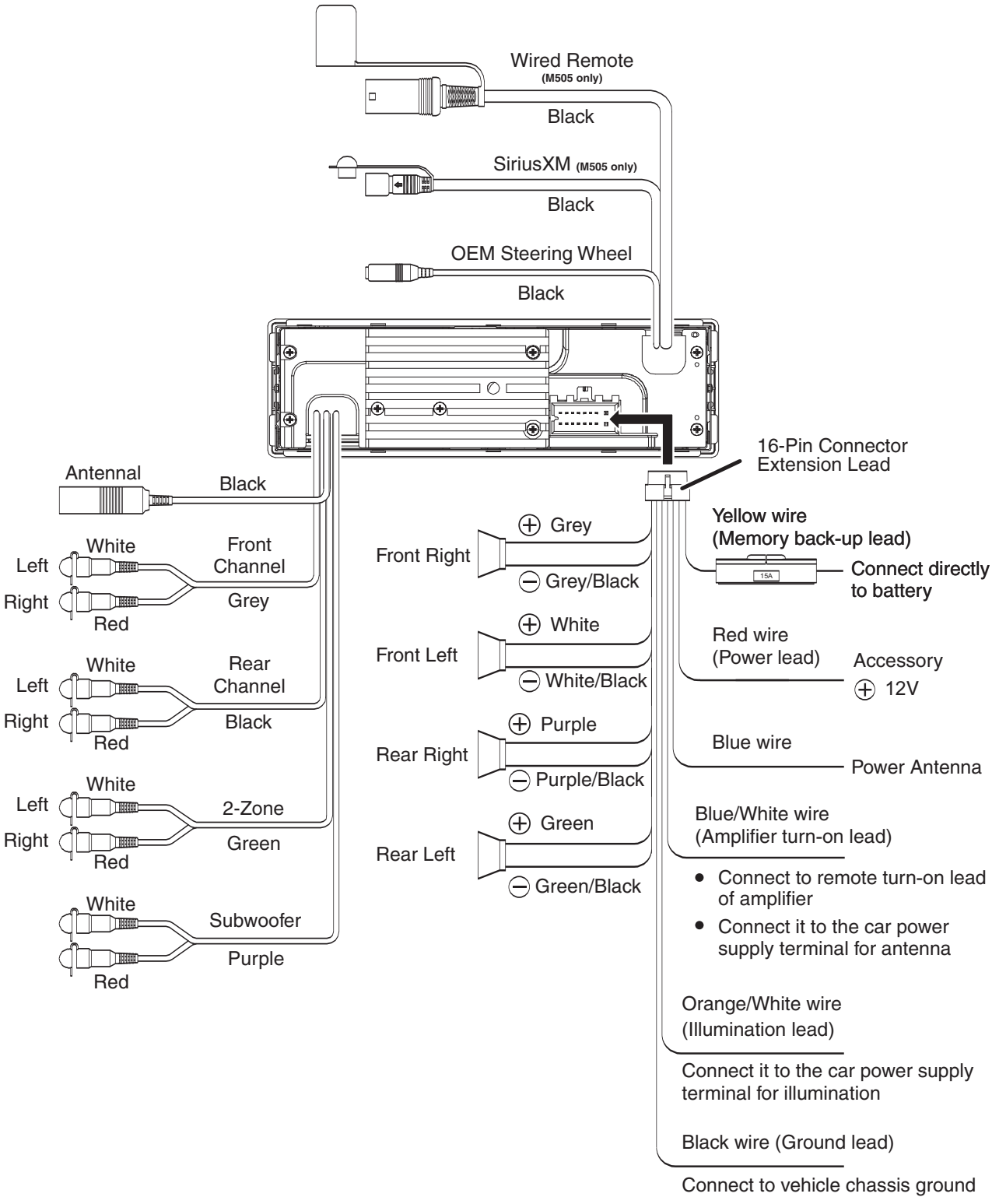
5. WIRE CONNECTION