9.1 PACKING

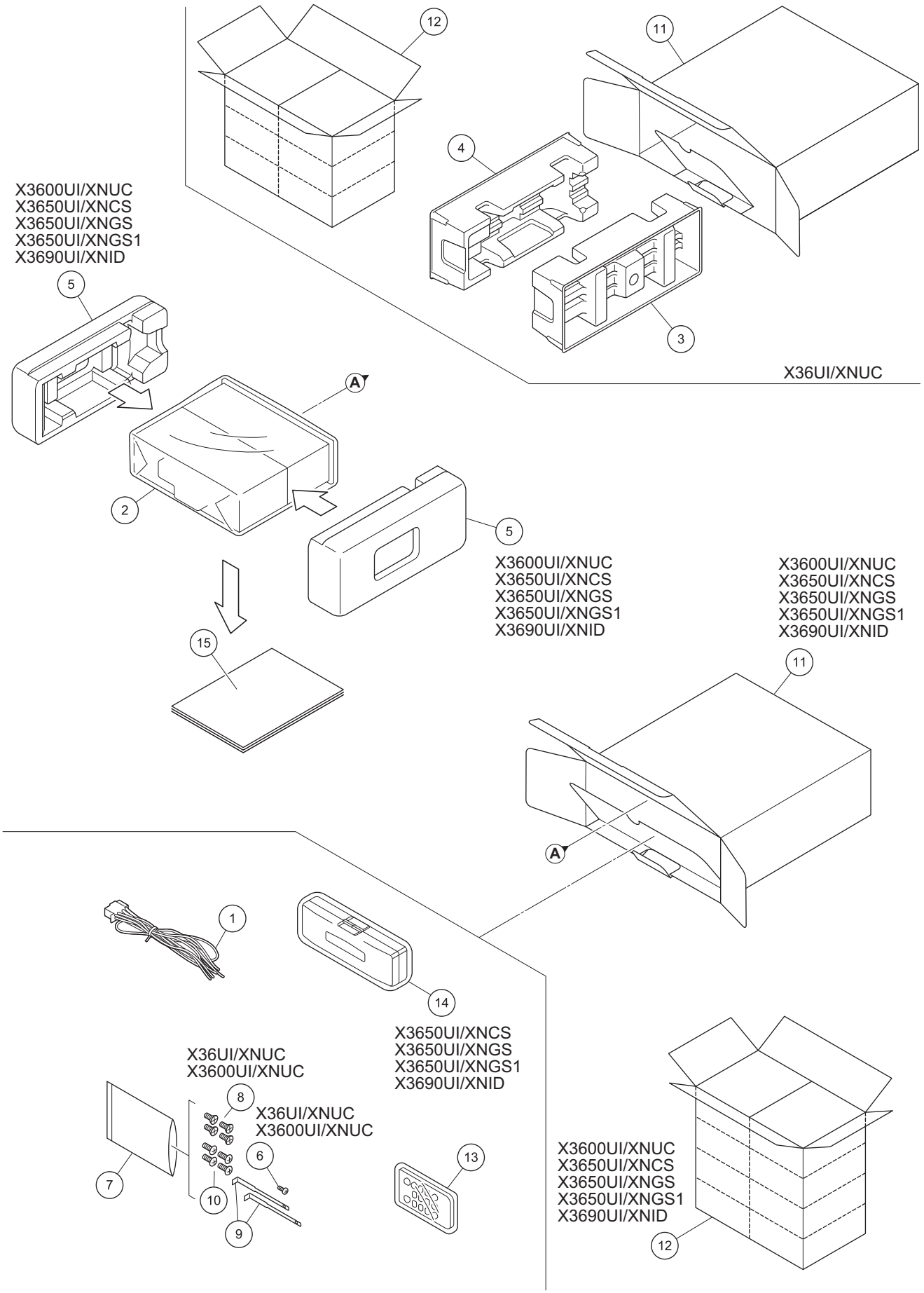
12
11
4
3
X3600UI/XNUC
X3650UI/XNCS
X3650UI/XNGS
X3650UI/XNGS1
X3690UI/XNID
5
X36UI/XNUC
A
2
5
X3600UI/XNUC
X3650UI/XNCS
X3650UI/XNGS
X3650UI/XNGS1
X3690UI/XNID
X3600UI/XNUC
X3650UI/XNCS
X3650UI/XNGS
X3650UI/XNGS1
X3690UI/XNID
15
11
A
1
14
X3650UI/XNCS
X3650UI/XNGS
X3650UI/XNGS1
X3690UI/XNID
X36UI/XNUC
X3600UI/XNUC
8
X36UI/XNUC
X3600UI/XNUC
6
7
10
9
13
X3600UI/XNUC
X3650UI/XNCS
X3650UI/XNGS
X3650UI/XNGS1
X3690UI/XNID
12

(1) PACKING SECTION PARTS LIST

Mark	No.	Description	Part No.
	1	Cord Assy	CDP1480
	2	Polyethylene Bag	See Contrast table (2)
	3	Protector	See Contrast table (2)
	4	Protector	See Contrast table (2)
	5	Protector	See Contrast table (2)
	6	Screw	See Contrast table (2)
	7	Polyethylene Bag	CEG1160
	8	Screw	See Contrast table (2)
	9	Handle	QNC3021
	10	Screw	TRZ50P080FTC
	11	Unit Box	See Contrast table (2)
	12	Contain Box	See Contrast table (2)
	13	Card Remote Control Unit	QXE1047
	14	Case Assy	See Contrast table (2)
	15-1	Owner's Manual	See Contrast table (2)
*	15-2	Warranty Card	See Contrast table (2)
*	15-3	Service Network	See Contrast table (2)

(2) CONTRAST TABLE

DEH-X36UI/XNUC, DEH-X3600UI/XNUC, DEH-X3650UI/XNCS, DEH-X3650UI/XNGS, DEH-X3650UI/XNGS1 and DEH-X3690UI/XNID are constructed the same except for the following:

Mark	No.	Description	DEH-X36UI/ XNUC	DEH-X3600UI/ XNUC	DEH-X3650UI/ XNCS	DEH-X3650UI/ XNGS	DEH-X3650UI/ XNGS1
	2	Polyethylene Bag	CEG1173	CEG1173	QEG3001	QEG3001	QEG3001
	3	Protector	CHP4103	Not used	Not used	Not used	Not used
	4	Protector	CHP4104	Not used	Not used	Not used	Not used
	5	Protector	Not used	CHP4594	CHP4594	CHP4594	CHP4594
	6	Screw	BPZ20P060FTC	BPZ20P060FTC	Not used	Not used	Not used
	8	Screw	CRZ50P090FTC	CRZ50P090FTC	Not used	Not used	Not used
	11	Unit Box	QHG3481	QHG3480	QHG3482	QHG3483	QHG3484
	12	Contain Box	QHL3481	QHL3480	QHL3482	QHL3483	QHL3484
	14	Case Assy	Not used	Not used	QXA3129	QXA3129	QXA3129
	15-1	Owner's Manual	QRD3201	QRD3201	QRD3202	QRD3203	QRD3203
*	15-2	Warranty Card	QRY3001	QRY3001	Not used	Not used	CRY1394
*	15-3	Service Network	Not used	Not used	Not used	Not used	CRY1395

Mark	No.	Description	DEH-X3690UI/ XNID
	2	Polyethylene Bag	QEG3001
	3	Protector	Not used
	4	Protector	Not used
	5	Protector	CHP4594
	6	Screw	Not used
	8	Screw	Not used
	11	Unit Box	QHG3485
	12	Contain Box	QHL3485
	14	Case Assy	QXA3129
	15-1	Owner's Manual	QRB3343
*	15-2	Warranty Card	CRY1304
*	15-3	Service Network	CRY1305

Owner's Manual,Installation Manual

Part No.	Language
QRD3201	English, French, Spanish(Espanol)
QRD3202	English, Spanish(Espanol), Portuguese(B)
QRD3203	English, Traditional Chinese, Arabic, Persian
QRB3343	English

9.2 EXTERIOR

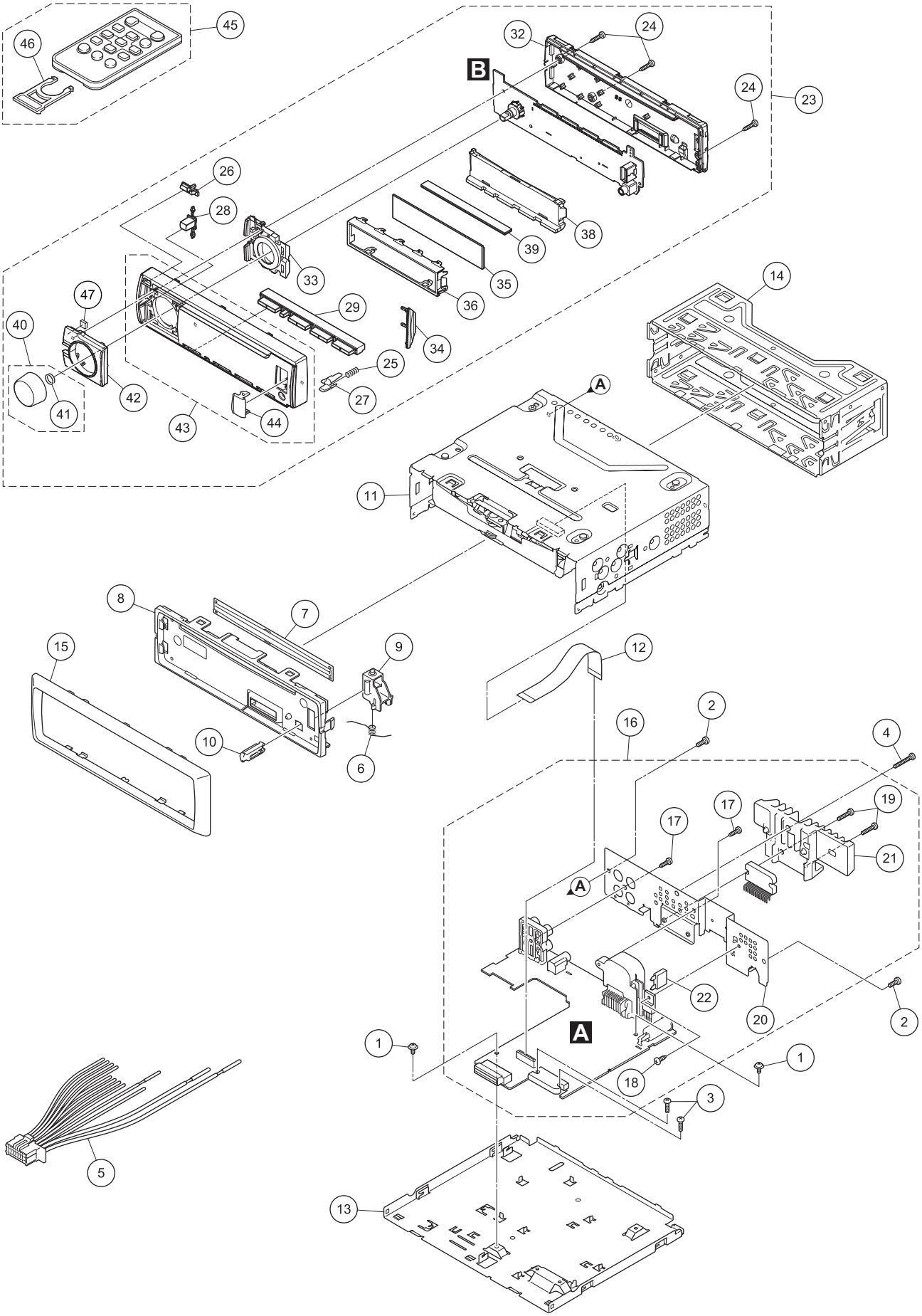

45
46
32
24
B
24
23
26
28
38
39
33
35
36
47
29
14
40
34
25
42
27
41
43
44
A
11
8
7
15
9
12
10
6
16
2
4
17
19
17
21
A
22
20
2
A
1
1
18
3
5
13

(1) EXTERIOR SECTION PARTS LIST

Mark	No.	Description	Part No.
	1	Screw	ASZ26P050FTC
	2	Screw	BSZ26P060FTC
	3	Screw	BSZ26P080FTC
	4	Screw	BSZ26P120FTC
	5	Cord Assy	CDP1480
	6	Spring	QBH3001
	7	Cover	QNM3029
	8	Panel	QNS3126
	9	Arm	QNV3025
	10	Button	QNV3026
	11	CD Mechanism Module (S11.6VA)	CXK5805
	12	FFC	QDE3029
	13	Case	QNB3013
	14	Holder	QNC3020
	15	Panel	QNS3576
	16	Tuner Amp Unit	See Contrast table (2)
	17	Screw	BPZ26P080FTC
	18	Screw	BSZ26P060FTC
	19	Screw	BSZ26P120FTC
	20	Holder	QNC3049
	21	Heat Sink	See Contrast table (2)
⚠	22	Fuse (10 A)	YEK5001
	23	Detachable Grille Assy	See Contrast table (2)
	24	Screw	BPZ20P100FTC
	25	Spring	CBH2210
	26	Button (EJECT)	QAC3131
	27	Button (DETACH)	QAC3137
	28	Button (MIX)	QAC3138
	29	Button (1-6)	QAC3140
	30	•••••	
	31	•••••	
	32	Cover	QNS3615
	33	Lighting Conductor	QNV3074
	34	Lighting Conductor	QNV3075
	35	Segment LCD (V1802)	CAW2041
	36	Holder	QNC3068
	37	•••••	
	38	Lighting Conductor	QNV3073
	39	Rubber Connector	QNV3079
	40	Knob Unit	QXA3670
	41	Spring	YBL5010
	42	Button Unit	QXA3946
	43	Grille Unit	See Contrast table (2)
	44	Door	QAT3012
	45	Card Remote Control Unit	QXE1047
	46	Cover	CNS7068
	47	Cushion	QNM3097

(2) CONTRAST TABLE

DEH-X36UI/XNUC, DEH-X3600UI/XNUC, DEH-X3650UI/XNCS, DEH-X3650UI/XNGS, DEH-X3650UI/XNGS1 and DEH-X3690UI/XNID are constructed the same except for the following:

Mark	No.	Description	DEH-X36UI/ XNUC	DEH-X3600UI/ XNUC	DEH-X3650UI/ XNCS	DEH-X3650UI/ XNGS	DEH-X3650UI/ XNGS1
	16	Tuner Amp Unit	QWM3628	QWM3628	QWM3629	QWM3630	QWM3630
	21	Heat Sink	QNR3010	QNR3010	QNR3010	QNR3002	QNR3002
	23	Detachable Grille Assy	QXA3914	QXA3913	QXA3915	QXA3915	QXA3915
	43	Grille Unit	QXA3959	QXA3958	QXA3960	QXA3960	QXA3960

Mark	No.	Description	DEH-X3690UI/ XNID
	16	Tuner Amp Unit	QWM3631
	21	Heat Sink	QNR3002
	23	Detachable Grille Assy	QXA3916
	43	Grille Unit	QXA3961

9.3 CD MECHANISM MODULE

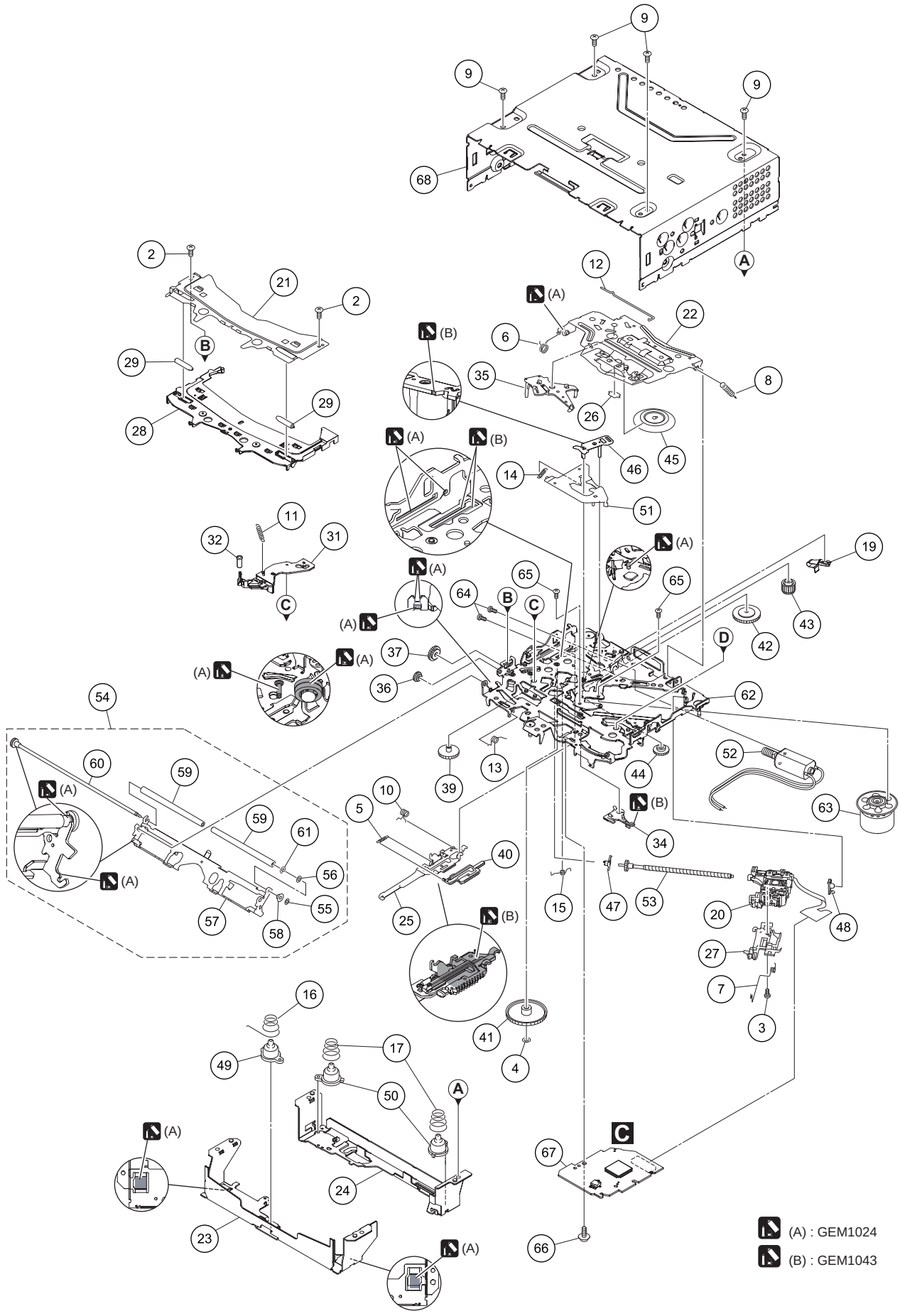

CD MECHANISM MODULE SECTION PARTS LIST

Mark No.	Description	Part No.
1	.....	
2	Screw	BSZ20P040FTC
3	Screw(M2 x 4)	CBA1835
4	Washer	CBF1038
5	Spring	CBH3010
6	Spring	CBH2855
7	Spring	CBH2856
8	Spring	CBH2860
9	Screw	BSZ26P060FTC
10	Spring	CBH3011
11	Coil Spring	CBH3095
12	Spring	CBH3014
13	Spring	CBH3015
14	Spring	CBH3016
15	Spring	CBH3017
16	Spring	CBH3086
17	Spring	CBH3019
18	.....	
19	Leaf Spring	CBL1824
20	PU Unit(P11)(Service)	CXX4754
21	Bracket	CND4553
22	Arm	CND6406
23	Bracket	CND6127
24	Bracket	CND5710
25	Lever	CND5398
26	Sheet	CNN3678
27	Rack	CNV8342
28	Guide	CNW2240
29	Roller	CNW1172
30	.....	
31	Arm	CNW2241
32	Roller	CNW1175
33	.....	
34	Arm	CNW1177
35	Arm	CNW1178
36	Gear	CNW1180
37	Gear	CNW1181
38	.....	
39	Gear	CNW1183
40	Rack	CNW1184
41	Gear	CNW1185
42	Gear	CNW1186
43	Gear	CNW1187
44	Gear	CNW2287
45	Clamper	CNW1190
46	Arm	CNW1192
47	Holder	CNW1193
48	Holder	CNW1194
49	Damper	CNW1197
50	Damper	CNW1198
51	Arm	CNW1726
52	Motor Unit(M2)(LOAD/CRG)	CXC4026
53	Screw Unit	CXC8894
54	Arm Assy	CXE6232
55	Washer	CBF1037
56	Washer	CBF1038
57	Arm	CND6242
58	Collar	CNW2444
59	Roller	CNW2500
60	Gear Unit	CXE6225
61	Washer	YE15FTC
62	Chassis Unit	CXE4528
63	Motor Unit(M1)(SPDL)	CXE2273
64	Screw	JFZ20P025FTC
65	Screw	JGZ17P022FTC
66	Screw	EBA1028
67	CD Core Unit (S11.6VA)	CWX4269
68	Chassis	CNA3181

12. ELECTRICAL PARTS LIST

NOTE:

- *Parts whose parts numbers are omitted are subject to being not supplied.*
- *The part numbers shown below indicate chip components.*

  Chip Resistor

  RS1/◯S◯◯◯J,RS1/◯◯S◯◯◯J

  Chip Capacitor (except for CQS.....)

  CKS....., CCS....., CSZS.....
- *The ⚠ mark found on some component parts indicates the importance of the safety factor of the part. Therefore, when replacing, be sure to use parts of identical designation.*
- *Meaning of the figures and others in the parentheses in the parts list.*

  Example) IC 301 is on the point (face A, 91 of x-axis, and 111 of y-axis) of the corresponding PC board.

  IC 301 (A, 91, 111) IC NJM2068V
- *The expression of the unit in this manual is shown by u instead of μ. Please do not make a mistake.*

A:DEH-X36UI/XNUC

B:DEH-X3600UI/XNUC

C:DEH-X3650UI/XNCS

E:DEH-X3650UI/XNGS

F:DEH-X3650UI/XNGS1

G:DEH-X3690UI/XNID

Unit Number : QWM3628(A,B)

Unit Number : QWM3629(C)

Unit Number : QWM3630(E,F)

Unit Number : QWM3631(G)

Unit Name : Tuner Amp Unit

Unit Number :

Unit Name : Keyboard Unit

Unit Number : CWX4269

Unit Name : CD Core Unit(S11.6VA)

A

Unit Number : QWM3628(A,B)
Unit Number : QWM3629(C)
Unit Number : QWM3630(E,F)
Unit Number : QWM3631(G)
Unit Name : Tuner Amp Unit

MISCELLANEOUS

Circuit Symbol and No.		Part No.
IC 201	(A,102,107) LSI	PM9013A
IC 301	(A,78,142) IC	PA2032A
IC 401	(A,150,91) IC	TDA7706
IC 531	(A,94,88) IC	337S3959
IC 551	(A,20,111) Regulator IC	BD9876EFJ
IC 552	(A,106,24) IC	BD2232G-G
IC 601	(A,111,77) IC	R5S726A0D216FP
IC 671	(A,131,75) IC	S-80827CNMC-B8M
IC 681	(A,114,94) Flash ROM Unit(A,B)	PEB106A8
	(A,114,94) Flash ROM Unit(C,E,F,G)	PEB103A8
IC 801	(A,105,18) L-MOS And Gate	TC7SET08FUS1
IC 911	(A,145,28) Regulator IC	BA49183-V12
Q 251	(A,14,130) Chip Transistor	RN1910
Q 252	(A,24,131) Chip Transistor	RN1910
Q 301	(A,86,127) Chip Transistor	RN4983
Q 531	(A,94,97) Transistor	LSAR523UB
Q 601	(A,93,68) Transistor	LTC014YEB
Q 751	(A,142,139) Transistor	KTD2092
Q 752	(A,141,134) Chip Transistor	RN4983
Q 871	(A,144,59) Transistor	2SA1577
Q 872	(A,144,67) Transistor	LTC143EUB
Q 941	(A,96,121) Transistor	LSCR523UB
D 401	(A,158,107) Diode	RN731VN
D 402	(A,158,100) Diode	RN731VN
D 551	(A,23,124) Diode	CMS03
D 552	(A,22,104) Diode	RB056L-40
D 601	(A,130,81) Diode(A,B)	RB751SM-40
D 602	(A,91,75) Diode(A,B)	RB551VM-30
D 751	(A,137,135) Diode	DZ2J082M0
D 801	(A,105,15) Diode	DZ2S068C
D 802	(A,93,17) Diode	DZ2S068C
D 803	(A,126,15) Diode	DZ2S068C
D 804	(A,119,14) Diode	DZ2S068C
D 805	(A,120,13) Diode	DZ2S068C
D 806	(A,116,13) Diode	DZ2S068C
D 807	(A,114,13) Diode	DZ2S068C
D 808	(A,117,13) Diode	DZ2S068C
D 809	(A,112,13) Diode	DZ2S068C
D 901	(A,141,127) Diode	1SR154-400
D 902	(A,137,127) Diode	1SR154-400
D 911	(A,158,66) Diode	CRG03
D 912	(A,161,66) Diode	CRG03
D 941	(A,93,125) Diode	DZ2J068M0
L 202	(A,94,102) Inductor	CTF1793
L 401	(A,155,104) Chip Coil	LCTAWR27J2520
L 402	(A,159,104) Chip Coil	LCTAWR15J2520

Circuit Symbol and No.		Part No.
L 403	(A,151,102) Inductor	CTF1786
L 404	(A,146,102) Inductor	CTF1786
L 405	(A,151,108) Inductor(A,B,C)	LCYB68NJ1608
L 406	(A,148,105) Inductor(A,B,C)	CTF1389
L 407	(A,147,107) Chip Coil(E,F,G)	LCTAWR27J2520
L 408	(A,141,104) Inductor(A,B,C)	LCTC4R7K1608
	(A,141,104) Inductor(E,F,G)	LCTC1R5K1608
L 409	(A,143,109) Chip Coil(E,F,G)	LCTAWR39J2520
L 410	(A,137,94) Chip Coil(A,B,C)	LCTAW470J2520
	(A,137,94) Inductor(E,F,G)	LCTAW2R2J2520
L 413	(A,144,82) Inductor	CTF1786
L 419	(A,161,95) Inductor	CTF1786
L 420	(A,161,96) Inductor	CTF1786
L 551	(A,30,107) Inductor	CTH1524
L 801	(A,115,17) Inductor	CTF1713
L 901	(A,112,141) Choke Coil 600 uH	CTH1432
X 401	(A,161,88) Crystal Resonator 36.48 MHz	CSS1848
X 601	(A,127,76) Crystal Resonator 12 MHz	CSS1847
X 602	(A,117,90)Ceramic Resonator 16.934 MHz	CSS1603
⚠ P251	(A,6,130) Fuse 3.0 A	CEK1386
P 402	(A,156,111) Surge Absorber	HSPC16701B02
VA801	(A,108,13) SMD Varistor	MLV0402ES012V0010N
VA802	(A,101,13) SMD Varistor	MLV0402ES012V0010N
CN701	(A,114,32) Connector	VKN1192
CN801	(A,109,4) Connector	CKS6452
JA251	(A,19,138) Pin Jack	CKB1099
JA401	(A,158,129) Antenna Jack	YKS5041
JA891	(A,42,138) Jack	CKS6437
JA901	(A,114,141) Connector	CKM1613
⚠	Fuse 10 A	YEK5001

RESISTORS

R 251	(A,18,131)	RS1/16SS821J
R 252	(A,13,128)	RS1/16SS821J
R 253	(A,15,131)	RS1/16SS223J
R 254	(A,12,131)	RS1/16SS223J
R 255	(A,30,132)	RS1/16SS821J
R 256	(A,19,131)	RS1/16SS821J
R 257	(A,28,131)	RS1/16SS223J
R 258	(A,22,131)	RS1/16SS223J
R 301	(A,68,127)	RS1/16SS471J
R 302	(A,82,125)	RS1/16SS471J
R 303	(A,74,127)	RS1/16SS471J
R 304	(A,78,126)	RS1/16SS471J
R 305	(A,90,127)	RS1/16SS103J
R 306	(A,90,129)	RS1/16SS221J
R 307	(A,89,128)	RS1/16SS223J
R 309	(A,89,125)	RS1/16SS103J
R 310	(A,100,129)	RS1/16SS0R0J
R 311	(A,88,125)	RS1/16SS473J
R 401	(A,161,106)	RS1/16SS221J
R 402	(A,161,100)	RS1/16SS751J
R 403	(A,139,104) (A,B,C)	RS1/16SS391J
	(A,139,104) (E,F,G)	RS1/16SS331J
R 404	(A,142,99)	RS1/16SS105J
R 406	(A,154,108)	RS1/16SS105J
R 407	(A,139,96)	RS1/16SS330J
R 408	(A,137,97) (A,B,C)	RS1/16SS471J
	(A,137,97) (E,F,G)	RS1/16SS361J
R 409	(A,144,98) (E,F,G)	RS1/16SS0R0J
R 411	(A,138,91) (A,B,C)	RS1/16SS681J
	(A,138,91) (E,F,G)	RS1/16SS391J
R 412	(A,153,78)	RS1/4SA8R2J
R 413	(A,158,78)	RS1/4SA8R2J
R 414	(A,139,87)	RS1/16SS0R0J
R 415	(A,152,80)	RS1/16SS0R0J
R 531	(A,91,94)	RS1/16SS473J
R 532	(A,91,85)	RS1/16SS222J
R 533	(A,92,85)	RS1/16SS222J
R 534	(A,94,92)	RS1/16SS272J
R 535	(A,95,92)	RS1/16SS472J
R 536	(A,96,92)	RS1/16SS472J
R 537	(A,96,85)	RS1/16SS101J
R 538	(A,96,84)	RS1/16SS101J
R 551	(A,26,111)	RS1/16SS682J
R 552	(A,30,112)	RS1/16SS0R0J
R 553	(A,27,112)	RS1/16SS1803D
R 554	(A,27,110)	RS1/16SS4302D
R 555	(A,39,124)	RS1/10SR471J
R 602	(A,107,63)	RS1/16SS473J
R 609	(A,122,64)	RS1/16SS473J
R 610	(A,122,70)	RS1/16SS473J
R 611	(A,123,69)	RS1/16SS473J
R 613	(A,122,76)	RS1/16SS152J
R 614	(A,123,78)	RS1/16SS473J
R 615	(A,130,79)	RS1/16SS473J
R 616	(A,125,67)	RS1/16SS473J
R 617	(A,131,81)	RS1/16SS103J
R 618	(A,125,82) (A,B,C)	RS1/16SS473J
	(A,125,82) (E,F)	RS1/16SS223J
R 619	(A,126,82) (E,F,G)	RS1/16SS473J
R 622	(A,125,87)	RS1/16SS473J
R 623	(A,130,85)	RAB4CQ473J
R 625	(A,114,90)	RS1/16SS221J
R 626	(A,113,90)	RS1/16SS221J
R 627	(A,112,88)	RS1/16SS221J
R 628	(A,111,90)	RS1/16SS221J
R 629	(A,109,92)	RS1/16SS221J
R 630	(A,110,89)	RS1/16SS221J
R 631	(A,108,92)	RS1/16SS473J
R 632	(A,106,91)	RS1/16SS473J
R 633	(A,107,90)	RS1/16SS101J
R 634	(A,103,88)	RS1/16SS102J
R 635	(A,102,88)	RS1/16SS102J
R 636	(A,100,91)	RS1/16SS473J
R 637	(A,101,90)	RS1/16SS473J
R 638	(A,104,92)	RS1/16SS473J
R 639	(A,98,91)	RS1/16SS472J
R 640	(A,99,91)	RS1/16SS472J
R 643	(A,99,82)	RS1/16SS104J
R 644	(A,98,79)	RS1/16SS101J
R 645	(A,96,79)	RS1/16SS101J
R 646	(A,93,75)	RS1/16SS103J
R 647	(A,98,78)	RS1/16SS101J
R 648	(A,95,76)	RS1/16SS102J
R 649	(A,95,75)	RS1/16SS102J
R 650	(A,95,74)	RS1/16SS102J
R 651	(A,97,71)	RS1/16SS473J

Circuit Symbol and No.		Part No.
R 652	(A,98,69)	RS1/16SS222J
R 653	(A,100,66)	RS1/16SS103J
R 659	(A,124,61)	RS1/16SS153J
R 660	(A,124,60)	RS1/16SS153J
R 664	(A,133,62)	RS1/16SS103J
R 668	(A,93,71)	RS1/16SS473J
R 669	(A,95,69)	RS1/16SS473J
R 671	(A,130,69)	RS1/16SS104J
R 681	(A,109,97)	RS1/16SS473J
R 682	(A,110,91)	RS1/16SS473J
R 683	(A,120,92)	RS1/16SS473J
R 684	(A,109,94)	RS1/16SS473J
R 685	(A,120,96)	RS1/16SS473J
R 701	(A,108,38)	RS1/16SS473J
R 702	(A,114,38)	RS1/16SS104J
R 703	(A,118,28)	RAB4CQ472J
R 704	(A,110,40)	RS1/16SS104J
R 706	(A,108,36)	RS1/16SS221J
R 707	(A,109,38)	RS1/16SS221J
R 708	(A,110,38)	RS1/16SS101J
R 709	(A,111,38)	RS1/16SS221J
R 710	(A,112,38)	RS1/16SS101J
R 711	(A,114,39)	RS1/16SS102J
R 715	(A,117,36)	RS1/16SS151J
R 716	(A,118,36)	RS1/16SS151J
R 717	(A,119,36)	RS1/16SS151J
R 718	(A,123,36)	RS1/16SS221J
R 719	(A,122,36)	RS1/16SS104J
R 752	(A,144,134)	RS1/4SA391J
R 753	(A,127,91)	RS1/16SS473J
R 754	(A,127,92)	RS1/16SS103J
R 801	(A,125,22)	RS1/10SR222J
R 802	(A,104,15)	RS1/10SR222J
R 803	(A,121,18)	RS1/16SS223J
R 804	(A,119,18)	RS1/16SS223J
R 805	(A,121,19)	RS1/10SR101J
R 806	(A,118,20)	RS1/10SR101J
R 807	(A,120,20)	RS1/10SR101J
R 808	(A,124,20)	RS1/10SR222J
R 809	(A,115,21)	RS1/10SR220J
R 810	(A,114,21)	RS1/10SR220J
R 811	(A,117,20)	RS1/10SR222J
R 812	(A,113,21)	RS1/10SR222J
R 813	(A,107,16)	RS1/10SR222J
R 814	(A,101,19)	RS1/10SR222J
R 815	(A,100,19)	RS1/16SS822J
R 816	(A,96,19)	RS1/10SR222J
R 817	(A,95,19)	RS1/10SR222J
R 851	(A,93,20)	RS1/16SS472J
R 871	(A,143,65)	RS1/10SR332J
R 872	(A,143,62)	RS1/16SS103J
R 878	(A,124,26)	RS1/10SR473J
R 891	(A,58,138)	RS1/16SS102J
R 892	(A,58,136)	RS1/16SS102J
R 911	(A,145,40)	RS1/10SR1R0J
R 912	(A,141,41)	RS1/10SR1R0J
R 913	(A,154,41)	RS1/16SS223J
R 914	(A,131,40)	RS1/16SS223J
R 941	(A,94,121)	RS1/16SS223J
R 942	(A,94,122)	RS1/16SS473J
R 943	(A,95,125)	RS1/16SS682J
R 944	(A,99,123)	RS1/4SA102J

CAPACITORS

C 201	(A,96,115)	CKSRYB105K10
C 202	(A,105,116)	CKSRYB105K10
C 203	(A,92,116)	CKSRYB105K10
C 204	(A,107,115)	CKSRYB105K10
C 205	(A,94,116)	CKSRYB105K10
C 206	(A,107,114)	CKSRYB105K10
C 207	(A,95,108)	CKSSYB104K10
C 208	(A,94,106)	CKSSYB104K10
C 209	(A,93,104) 10 uF	CCG1192
C 210	(A,96,106)	CCSSCH151J50
C 211	(A,110,107)	CCSSCH151J50
C 212	(A,108,109) 10 uF	CCG1192
C 213	(A,108,106)	CKSSYB104K10
C 214	(A,108,104)	CKSSYB104K10
C 215	(A,108,102)	CKSSYB104K10
C 216	(A,92,101) 10 uF	CCG1192
C 217	(A,95,100)	CKSSYB104K10
C 218	(A,114,109)	XCEVW470M16
C 219	(A,112,103) 10 uF	CCG1192
C 220	(A,106,98) 10 uF	CCG1192
C 223	(A,91,101)	CKSSYB102K50
C 224	(A,115,103)	CKSSYB104K10
C 229	(A,110,112)	CKSSYB102K50
C 236	(A,110,104)	CKSRYB105K10
C 251	(A,35,128) 4.7 uF	CCG1201
C 252	(A,17,127) 4.7 uF	CCG1201
C 253	(A,17,130)	CCSSCH101J50
C 254	(A,11,130)	CCSSCH101J50
C 255	(A,35,132) 4.7 uF	CCG1201
C 256	(A,31,130) 4.7 uF	CCG1201
C 257	(A,26,131)	CCSSCH101J50
C 258	(A,21,131)	CCSSCH101J50
C 260	(A,33,138)	CKSSYB104K10
C 261	(A,6,133)	CKSSYB103K16
C 301	(A,69,129)	CKSRYB224K16
C 303	(A,80,129)	CKSRYB224K16
C 305	(A,72,129)	CKSRYB224K16
C 307	(A,77,129)	CKSRYB224K16
C 313	(A,84,130)	CKSRYB105K16
C 314	(A,135,126)	CKSRYB104K16
C 317	(A,60,129)	XCEVW100M16
C 319	(A,62,134)	CCSSCH101J50
C 320	(A,64,134)	CCSSCK1R0C50
C 321	(A,83,129)	CCSSCH101J50
C 322	(A,106,126)	CKSRYB104K16
C 323	(A,106,129)	CCSRCH100D50
C 324	(A,102,129)	CCSRCH100D50
C 325	(A,94,132)	CCSRCH100D50
C 326	(A,95,140)	CCSRCH100D50
C 327	(A,88,129)	CKSRYB105K10
C 401	(A,154,100)	CKSSYB104K10
C 402	(A,155,101)	CKSSYB103K16
C 403	(A,153,102)	CKSRYB105K10
C 405	(A,162,101)	CKSSYB103K16
C 406	(A,160,101)	CKSSYB103K16

Circuit Symbol and No.		Part No.
C 408	(A,161,105)	CKSSYB103K16
C 409	(A,157,105)	CCSSCH6R0D50
C 410	(A,155,107)	CCSSCH330J50
C 411	(A,148,99)	CKSSYB103K16
C 412	(A,148,101)	CKSSYB104K10
C 413	(A,150,101)	CKSSYB104K10
C 414	(A,146,100)	CKSSYB103K16
C 415	(A,144,101) 10 uF	CCG1192
C 416	(A,147,100)	CKSSYB104K10
C 418	(A,142,101)	CKSSYB223K16
C 419	(A,147,110) (E,F,G)	CCSSCH150J50
C 420	(A,151,106) (E,F,G)	CKSSYB103K16
C 421	(A,154,111) (A,B,C)	CCSSCJ3R0C50
C 423	(A,144,106) (E,F,G)	CCSSCH8R0D50
C 424	(A,141,101)	CKSSYB103K16
C 425	(A,139,99) 10 uF	CCG1192
C 426	(A,140,97)	CKSSYB104K10
C 427	(A,144,97)	CKSSYB104K10
C 428	(A,137,96) (A,B,C)	CCSSCH101J50
	(A,137,96) (E,F,G)	CCSSCH220J50
C 429	(A,136,96)	CKSSYB103K16
C 430	(A,139,90)	CKSSYB102K50
C 432	(A,138,92) (A,B,C)	CCSSCH820J50
	(A,138,92) (E,F,G)	CCSSCK2R0C50
C 433	(A,136,91)	CKSSYB102K50
C 435	(A,139,86) (A,B,C)	CKSRYB474K10
	(A,139,86) (E,F,G)	CKSRYB105K10
C 439	(A,145,80) (E,F,G)	CKSRYB104K16
C 440	(A,142,86)	CKSSYB102K50
C 441	(A,137,89)	CCSSCH100D50
C 442	(A,146,83)	CKSSYB104K10
C 444	(A,152,82) 2.2 uF	CCG1218
C 445	(A,157,82) (A,B,C)	CKSSYB104K10
C 447	(A,157,83) (A,B,C)	CKSRYB105K10
C 448	(A,158,85) (A,B,C)	CKSSYB104K10
	(A,158,85) (E,F,G)	CKSSYB103K16
C 449	(A,161,85)	CCSSCH9R0D50
C 450	(A,161,90)	CCSSCH9R0D50
C 451	(A,159,91)	CKSSYB104K10
C 452	(A,159,94)	CKSRYB105K10
C 453	(A,160,96)	CKSSYB104K10
C 455	(A,159,97)	CKSRYB224K16
C 456	(A,162,92)	CKSSYB472K25
C 457	(A,162,93)	CKSSYB472K25
C 459	(A,154,83) (A,B,C)	CCSSCH101J50
	(A,154,83) (E,F,G)	CKSSYB102K50
C 461	(A,145,104) (A,B,C)	CKSSYB104K10
C 464	(A,162,98) 1 uF(E,F,G)	DCH1246
C 465	(A,142,106) (E,F,G)	CKSSYB103K16
C 466	(A,137,79) (E,F,G)	CKSRYB105K10
C 467	(A,151,81) (E,F,G)	CKSSYB104K10
C 468	(A,142,79) (E,F,G)	CKSRYB105K10
C 531	(A,91,93)	CKSSYB104K10
C 532	(A,94,93)	CKSSYB104K10
C 551	(A,13,121)	XCEVW221M16
C 552	(A,13,107)	CKSRYB105K16
C 553	(A,15,110)	CKSSYB103K16
C 555	(A,25,112)	CKSSYB682K25
C 556	(A,32,120)	CEVQW221M6R3
C 557	(A,33,116)	CKSRYB105K10
C 560	(A,108,21)	CKSRYB105K10

Circuit Symbol and No.		Part No.
C 561	(A,103,24)	CKSRYB105K10
C 564	(A,33,114) 4.7 uF	CCG1201
C 565	(A,16,107) 4.7 uF	CCG1222
C 601	(A,105,66)	CKSSYB104K10
C 602	(A,109,65)	CKSSYB104K10
C 603	(A,111,65)	CKSSYB104K10
C 604	(A,113,65)	CKSSYB104K10
C 605	(A,117,65)	CKSSYB104K10
C 606	(A,122,71)	CKSSYB104K10
C 607	(A,127,73)	CCSSCH120J50
C 608	(A,127,78)	CCSSCH120J50
C 609	(A,122,73)	CKSSYB104K10
C 610	(A,122,75)	CKSSYB104K10
C 611	(A,122,77)	CKSSYB104K10
C 612	(A,123,82)	CKSSYB104K10
C 613	(A,124,82)	CKSSYB104K10
C 620	(A,114,88)	CKSSYB104K10
C 621	(A,109,88)	CKSSYB104K10
C 622	(A,106,93)	CCSSCH220J50
C 623	(A,106,88)	CKSSYB104K10
C 624	(A,105,88)	CKSSYB104K10
C 625	(A,104,90)	CKSSYB104K10
C 626	(A,100,80)	CKSSYB104K10
C 627	(A,97,81)	CCSSCH220J50
C 628	(A,96,81)	CCSSCH220J50
C 629	(A,99,75)	CKSSYB104K10
C 630	(A,99,73)	CKSSYB104K10
C 631	(A,97,77)	CCSSCH220J50
C 672	(A,123,73) 1 uF	DCH1246
C 681	(A,121,96)	CKSSYB104K10
C 683	(A,120,94)	CCSSCJ3R0C50
C 701	(A,111,40)	CKSSYB103K16
C 704	(A,120,39)	CCSSCH100D50
C 705	(A,118,39)	CCSSCH100D50
C 706	(A,117,38)	CCSSCH100D50
C 752	(A,140,136)	CKSSYB104K10
C 753	(A,147,130) 4.7 uF	CCG1201
C 801	(A,124,6)	CCSRCH221J50
C 806	(A,125,8)	CKSRYB104K16
C 807	(A,122,14)	CKSRYB105K10
C 808	(A,108,19)	CKSRYB104K16
C 809	(A,97,16)	CCSRCH221J50
C 810	(A,96,13)	CCSRCH221J50
C 811	(A,104,20)	CKSSYB104K10
C 873	(A,124,24)	CKSRYB104K16
C 891	(A,52,138)	CKSRYB104K16
C 892	(A,34,139)	CKSRYB104K16
C 901	(A,133,124) 2 200 uF/16 V	CCH2040
C 912	(A,152,40)	CKSSYB102K50
C 913	(A,131,43)	CKSSYB102K50
C 914	(A,156,56)	XCEAT102M16
C 915	(A,132,42)	CKSRYB104K16
C 916	(A,147,43) 4.7 uF	CCG1201
C 917	(A,145,46)	CKSSYB102K50
C 919	(A,151,42) 4.7 uF	CCG1201
C 921	(A,135,42) 4.7 uF	CCG1201
C 923	(A,159,41) 4.7 uF	CCG1201
C 926	(A,140,44) 4.7 uF	CCG1201
C 927	(A,140,42)	CKSSYB102K50
C 941	(A,96,124)	CKSRYB104K16

Circuit Symbol and No.		Part No.
C 969	(A,135,113) 10 uF	CCG1192

B

Unit Number :
Unit Name : Keyboard Unit

MISCELLANEOUS

IC 1802	(B,84,22) IC	PDC202B
IC 1851	(B,47,21) IC	BH2228FV
IC 1941	(A,155,39) IR RC REC Module	PNJ4833M
Q 1851	(B,31,8) Chip Transistor	HN1C01FU
Q 1852	(B,32,11) Chip Transistor	HN1C01FU
Q 1853	(B,56,24) Chip Transistor	HN1C01FU
Q 1857	(B,20,9) Transistor	LSCR523UB
Q 1858	(B,12,10) Transistor	LSCR523UB
Q 1859	(B,12,24) Transistor	LSCR523UB
Q 1866	(B,110,26) Transistor	LSCR523UB
Q 1867	(B,120,26) Transistor	LSCR523UB
Q 1868	(B,128,27) Transistor	LSCR523UB
D 1882	(A,9,20) LED	SMLVN6RGB2UK(B)
D 1883	(A,41,20) LED	SMLVN6RGB2UK(B)
D 1884	(A,162,26) LED	SMLVN6RGB2UK(B)
D 1885	(A,148,23) LED	SMLVN6RGB2UK(B)
D 1886	(A,47,23) LED	SMLVN6RGB2UK(B)
L 1921	(B,136,11) Inductor	CTF1389
L 1922	(B,131,6) Inductor	CTF1389
L 1923	(B,140,7) Inductor	CTF1389
X 1801	(B,69,22) Ceramic Resonator 5.00 MHz	CSS1547
S 1821	(A,51,5) Push Switch	CSG1155
S 1822	(A,11,41) Push Switch	CSG1155
S 1823	(A,67,5) Push Switch	CSG1155
S 1824	(A,15,5) Push Switch	CSG1155
S 1826	(A,5,20) Push Switch	CSG1155
S 1828	(A,35,33) Push Switch	CSG1155
S 1830	(A,25,19) Encoder(MULTI-CONTROL)	CSD1168
S 1832	(A,35,5) Push Switch	CSG1155
S 1834	(A,76,5) Push Switch	CSG1155
S 1835	(A,146,5) Push Switch	CSG1155
S 1836	(A,123,5) Push Switch	CSG1155
S 1837	(A,130,5) Push Switch	CSG1155
S 1838	(A,99,5) Push Switch	CSG1155
S 1839	(A,107,5) Push Switch	CSG1155
S 1840	(A,83,5) Push Switch	CSG1155
S 1842	(A,15,33) Push Switch	CSG1155
CN1911	(A,155,26) Connector	CKS6443
CN1931	(B,109,10) Connector	CKS6451
JA1921	(A,156,11) Jack	YKN5006
V 1802	(A,53,32) Segment LCD	CAW2041

RESISTORS

R 1809	(B,76,10)	RS1/16SS473J
R 1810	(B,63,21)	RS1/16SS103J
R 1824	(B,32,31)	RS1/16SS273J
R 1851	(B,50,16)	RS1/10SR222J
R 1852	(B,48,16)	RS1/10SR222J
R 1853	(B,52,9)	RS1/10SR222J
R 1854	(B,41,18)	RAB4CQ102J
R 1855	(B,42,22)	RAB4CQ102J
R 1856	(B,26,10)	RS1/16SS101J
R 1857	(B,28,8)	RS1/16SS101J
R 1858	(B,13,13)	RS1/16SS101J
R 1859	(B,101,23)	RS1/16SS101J
R 1860	(B,58,21)	RS1/16SS101J
R 1861	(B,58,24)	RS1/16SS101J
R 1862	(B,24,7)	RS1/16SS680J
R 1864	(B,17,8)	RS1/16SS680J
R 1866	(B,11,20)	RS1/16SS680J
R 1868	(B,115,25)	RS1/16SS680J
R 1870	(B,125,27)	RS1/16SS680J
R 1872	(B,131,26)	RS1/16SS680J
R 1931	(B,74,6)	RS1/10SR222J
R 1932	(B,78,6)	RS1/10SR222J
R 1944	(B,144,27)	RS1/10SR101J

CAPACITORS

C 1801	(B,78,12)	CKSSYB104K10
C 1802	(B,77,12)	CKSSYB104K10
C 1803	(B,79,12)	CKSSYB104K10
C 1804	(B,72,21)	CKSRYB105K10
C 1805	(B,72,23)	CKSSYB104K10
C 1854	(B,52,23)	CKSSYB103K16
C 1855	(B,52,24)	CKSRYB105K10
C 1911	(B,164,34)	CKSRYB104K16
C 1912	(B,140,16)	CKSRYB104K16
C 1941	(B,144,29) 10 uF	CCG1192

C

Unit Number : CWX4269
Unit Name : CD Core Unit(S11.6VA)

MISCELLANEOUS

IC 201	(B,24,38) IC	PEQ094A
IC 301	(A,37,12) IC	BD8223EFV
Q 101	(B,12,54) Transistor	2SA1577
Q 102	(B,16,55) Chip Digital Transistor	LTA123JUB
X 201	(B,25,50) Ceramic Resonator 16.934 MHz	CSS1603
S 901	(A,43,54) Spring Switch(HOME)	CSN1080
S 903	(B,22,13) Spring Switch(DSCSNS)	CSN1081
CN101	(A,17,58) Connector	CKS4808
CN701	(A,26,30) Connector	CKS6146

RESISTORS

R 101	(B,7,59)	RS1/10SR2R4J
R 102	(B,8,59)	RS1/10SR2R4J
R 103	(B,10,59)	RS1/10SR2R7J
R 108	(B,14,58)	RS1/16SS105J
R 109	(B,15,50)	RS1/16SS152J
R 214	(B,18,28)	RS1/16SS103J
R 215	(B,17,28)	RS1/16SS393J
R 216	(B,13,36)	RS1/16SS102J
R 217	(B,10,33)	RS1/16SS562J
R 218	(B,10,36)	RS1/16SS472J
R 229	(B,13,35)	RS1/16SS471J
R 232	(A,31,55)	RS1/16SS0R0J
R 237	(B,34,45)	RS1/16SS221J
R 240	(B,35,40)	RS1/16SS473J

Circuit Symbol and No.		Part No.
R 245	(A,34,46)	RS1/16SS104J
R 254	(A,37,56)	RS1/16SS104J
R 260	(B,30,27)	RS1/16SS103J
R 264	(A,22,9)	RS1/16SS102J
R 281	(B,34,38)	RS1/16SS560J
R 282	(B,34,39)	RS1/16SS560J
R 291	(B,34,35)	RS1/16SS560J
R 294	(B,28,49)	RS1/16SS471J
R 303	(A,28,12)	RS1/16SS123J
R 304	(A,29,11)	RS1/16SS123J
R 305	(A,27,9)	RS1/16SS102J
R 306	(A,27,12)	RS1/16SS472J
R 307	(A,26,9)	RS1/16SS102J
R 308	(A,26,12)	RS1/16SS472J
R 309	(A,35,7)	RS1/16SS473J
R 310	(B,31,9)	RS1/16SS472J
R 311	(B,31,10)	RS1/16SS472J
R 312	(B,31,11)	RS1/16SS472J
R 313	(B,31,12)	RS1/16SS472J
R 701	(A,22,38)	RS1/16SS101J
R 702	(A,24,38)	RS1/16SS101J
R 706	(A,33,42)	RS1/16SS221J

CAPACITORS

Circuit Symbol and No.		Part No.
C 104	(B,15,52)	CKSQYB475K6R3
C 110	(B,11,44)	CKSSYB104K10
C 111	(B,12,44)	CKSSYB103K16
C 203	(B,22,47)	CKSSYB104K10
C 205	(A,17,41)	CKSRYB105K10
C 209	(B,29,48)	CKSRYB104K16
C 210	(B,33,44)	CKSSYB104K10
C 211	(B,34,42)	CKSSYB104K10
C 212	(B,23,29)	CKSSYB104K10
C 213	(B,18,26)	CKSSYB332K50
C 214	(B,17,26)	CKSSYB473K16
C 215	(B,19,29)	CKSSYB104K10
C 216	(B,13,33)	CKSSYB152K50
C 217	(B,10,35)	CCSSCH390J50
C 218	(B,10,37)	CCSSCH5R0C50
C 219	(B,14,35)	CKSSYB104K10
C 220	(A,18,39)	CKSSYB104K10
C 221	(B,14,32)	CKSSYB104K10
C 222	(B,14,37)	CKSSYB104K10
C 223	(B,13,42)	CCSSCH680J50
C 224	(B,14,45)	CCSSCH470J50
C 225	(B,14,47)	CKSSYB103K16
C 228	(B,10,34)	CCSSCH180J50
C 229	(B,9,41)	CKSSYB104K10
C 233	(B,33,46)	CKSSYB103K16
C 236	(B,8,41)	CKSSYB104K10
C 238	(A,26,45)	CKSRYB104K16
C 299	(A,26,43)	CKSSYB104K10
C 302	(B,29,12)	CKSSYB102K50
C 303	(B,30,12)	CKSSYB102K50
C 304	(B,28,12)	CKSSYB223K16
C 305	(B,27,12)	CKSSYB104K10
C 306	(A,32,7)	CKSSYB104K10
C 307	(A,42,19)	CKSRYB105K10
C 308	(A,32,16)	CKSRYB105K10
C 710	(A,34,43)	CKSSYB102K50